CFI-1000 series

Issued	Checked	Approved
SIE CS '20.12.16 Miyawaki		SIE CS '20.12.16 Monden

SM-PS5-0023E-01

PlayStation®5

BOARD SERVICE MANUAL 1st edition

for EDM-010 BOARD

Sony Interactive Entertainment
CS Department
Published in Japan ©2020. 12

SIE Confidential

Reproduction Prohibited

SAFETY CHECK-OUT

After correcting the original service problem, perform the following safety checks before releasing the set to the customer:

1. Check the area of your repair for unsoldered or poorly soldered connections. Check the entire board surface for solder splashes and bridges.
2. Check the interboard wiring to ensure that no wires are "pinched" or contact high-wattage resistors.
3. Look for unauthorized replacement parts, particularly transistors, that were installed during a previous repair. Point them out to the customer and recommend their replacement.
4. Look for parts which, though functioning, show obvious signs of deterioration. Point them out to the customer and recommend their replacement.
5. Check the power cable for cracks and abrasion. Recommend the replacement of any such power cable to the customer.
6. Check the B+ voltage to see it is at the values specified.
7. Check the metal trim, "metallized" knobs, screws, and all other exposed metal parts for AC leakage.
   Check leakage as described below.

SAFETY-RELATED COMPONENT WARNING!!

COMPONENTS IDENTIFIED BY MARK ⚠ OR DOTTED LINE WITH MARK ⚠ ON THE SCHEMATIC DIAGRAMS AND IN THE PARTS LIST ARE CRITICAL TO SAFE OPERATION. REPLACE THESE COMPONENTS WITH SONY PARTS WHOSE PART NUMBERS APPEAR AS SHOWN IN THIS MANUAL OR IN SUPPLEMENTS PUBLISHED BY SONY.

ATTENTION AU COMPOSANT AYANT RAPPORT À LA SÉURITÉ!!

LES COMPOSANTS IDENTIFIÉS PAR UNE MARQUE ⚠ SUR LES DIAGRAMMES SCHÉMATIQUES ET LA LISTE DES PIÈCES SONT CRITIQUES POUR LA SÉCURITÉ DE FONCTIONNEMENT. NE REMPLACER CES COMPOSANTS QUE PAR DES PIÈCES SONY DONT LES NUMÉROS SONT DONNÉS DANS CE MANUEL OU DANS LES SUPPLÉMENTS PUBLIÉS PAR SONY.

LEAKAGE TEST

The AC leakage from any exposed metal part to earth ground and from all exposed metal parts to any exposed metal part having a return to chassis, must not exceed 0.5 mA (500 microampers.).
Leakage current can be measured by any one of three methods.

1. A commercial leakage tester, such as the Simpson 229 or RCA WT-540A. Follow the manufacturers' instructions to use these instruments.
2. A battery-operated AC milliammeter. The Data Precision 245 digital multimeter is suitable for this job.
3. Measuring the voltage drop across a resistor by means of a VOM or battery-operated AC voltmeter. The "limit" indication is 0.75 V, so analog meters must have an accurate low-voltage scale. The Simpson 250 and Sanwa SH-63Trd are examples of a passive VOM that is suitable. Nearly all battery operated digital multimeters that have a 2 V AC range are suitable. (See Fig. A)

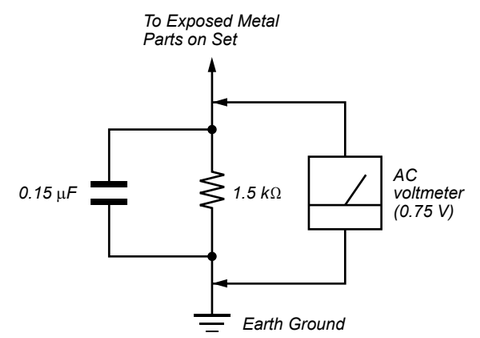

Fig. A. Using an AC voltmeter to check AC leakage.

SPECIAL COMPONENT NOTICE

The components identified by mark 🔒 contain confidential information.
Strictly follow the instructions whenever the components are repaired and/or replaced.

CAUTION:
The use of optical instruments with this product will increase eye hazard.

CAUTION
Use of controls or adjustments or performance of procedures other than those specified herein may result in hazardous radiation exposure.

WARNING!!

WHEN SERVICING, DO NOT APPROACH THE LASER EXIT WITH THE EYE TOO CLOSELY. IN CASE IT IS NECESSARY TO CONFIRM LASER BEAM EMISSION, BE SURE TO OBSERVE FROM A DISTANCE OF MORE THAN 25 cm FROM THE SURFACE OF THE OBJECTIVE LENS ON THE OPTICAL PICK-UP BLOCK.

CAUTION
The use of optical instruments with this product will increase eye hazard. As the laser beam used in this CD/DVD ROM Drive is harmful to eyes, do not attempt disassemble the cabinet.
Refer servicing to qualified personnel only.

CAUTION
Ensure that this product is disconnected from the power plug before the laser protective housing is removed.

CAUTION
CLASS 2 LASER RADIATION INSIDE THE EQUIPMENT. DO NOT CONNECT TO AC MAINS WHEN IT IS DISASSEMBLED.

CAUTION
Ensure that this product is disconnected from the power plug before the laser protective housing is removed.

CAUTION
Risk of explosion if battery is replaced by an incorrect type. Dispose of used batteries according to the instructions.

Lithium Batteries
If an equipment is provided with a replaceable lithium battery, the following applies:

– if the battery is placed in an OPERATOR ACCESS AREA, there shall be a warning close to the battery or in both the operating and the service instructions:

– if the battery is placed elsewhere in the equipment, there shall be a warning close to the battery or in the service instructions.

Reproduction Prohibited

CHANGE NOTE

Edition	Date	Description
1st	2020/12/16	

SIE Confidential

Reproduction Prohibited

TABLE OF CONTENTS

1. CIRCUIT DIAGRAM

1-1 EDM-010 Board(1/23) ..... Main SoC (Signal)
1-2 EDM-010 Board(2/23) ..... Main SoC (Power)
1-3 EDM-010 Board(3/23) ..... Main SoC (JTAG)
1-4 EDM-010 Board(4/23) ..... GDDR6(Ch.A/B)
1-5 EDM-010 Board(5/23) ..... GDDR6(Ch.C/D)
1-6 EDM-010 Board(6/23) ..... GDDR6(Ch.E/F)
1-7 EDM-010 Board(7/23) ..... GDDR6(Ch.G/H)
1-8 EDM-010 Board(8/23) ..... HDMI Out
1-9 EDM-010 Board(9/23) ..... USB Type-C
1-10 EDM-010 Board(10/23) ..... USB Type-A
1-11 EDM-010 Board(11/23)..... Flash Controller
1-12 EDM-010 Board(12/23) DDR4
1-13 EDM-010 Board(13/23) ..... NAND
1-14 EDM-010 Board(14/23) ..... M.2 I/F
1-15 EDM-010 Board(15/23) ..... Subsystem
1-16 EDM-010 Board(16/23) ..... MISC
1-17 EDM-010 Board(17/23) ..... BT/WiFi
1-18 EDM-010 Board(18/23) ..... GbE
1-19 EDM-010 Board(19/23) ..... SATA
1-20 EDM-010 Board(20/23) .....Power Source(1)
1-21 EDM-010 Board(21/23) .....Power Source(2)
1-22 EDM-010 Board(22/23) ... Power Source(VRM)
1-23 EDM-010 Board(23/23) ..... Power Source(SSD)
1-24 EDS-010 Board(1/1)
1-25 EDL-010 Board(1/1)
1-26 EDU-010 Board(1/1) ..

2. PRINTED WIRING BOARDS

2-1. EDM-010 Board (Side A)
2-2. EDM-010 Board (Side B)
2-3. EDS-010 Board (Side A)
2-4. EDS-010 Board (Side B)
2-5. EDL-010 Board (Side A)
2-6. EDL-010 Board (Side B)
2-7. EDU-010 Board (Side A)
2-8. EDU-010 Board (Side B)

3. ELECTRICAL PARTS LIST

3-1. EDM-010 Board
3-2. EDS-010 Board
3-3. EDL-010 Board
3-4. EDU-010 Board

Reproduction Prohibited

SECTION 1
CIRCUIT DIAGRAM

Note on Schematic Diagram:

- All capacitors are in μF unless otherwise noted. pF: μμF 50 WV or less are not indicated except for electrolytics and tantalums.
- All resistors are in Ω and 1/4 W or less unless otherwise specified.
- % : indicates tolerance.

Note:	Note:
The components identified by mark ⚠ or dotted line with mark ⚠ are critical for safety. Replace only with part number specified.	Les composants identifiés par une marque ⚠ sont critiques pour la sécurité. Ne les remplacer que par une piéce portant le numéro spécifié.

Note:
∗ : With Drive Parts

Reproduction Prohibited

1-1.EDM-010 Board (1/23)

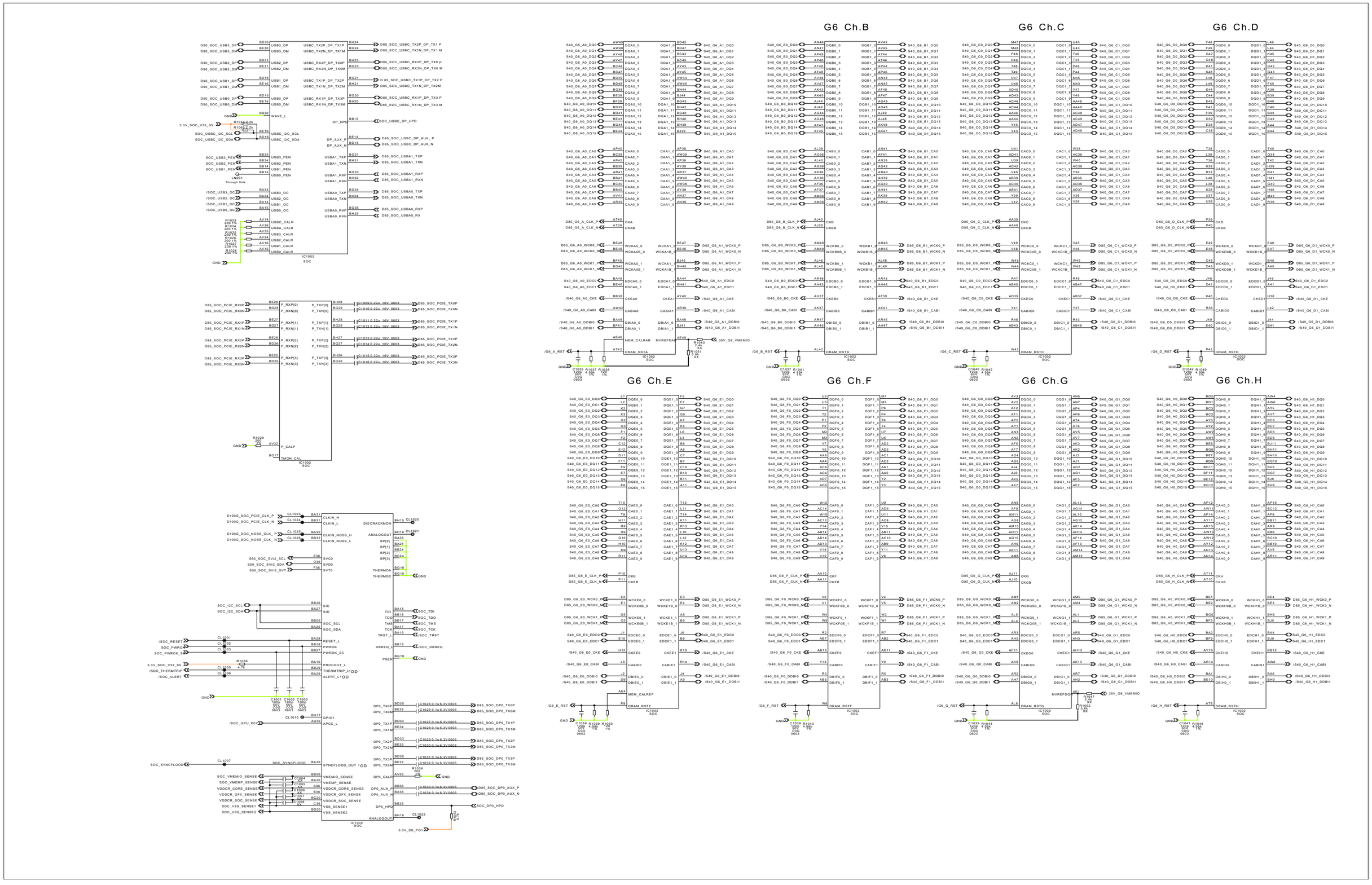

Reproduction Prohibited

1-2. EDM-010 Board (2/23)

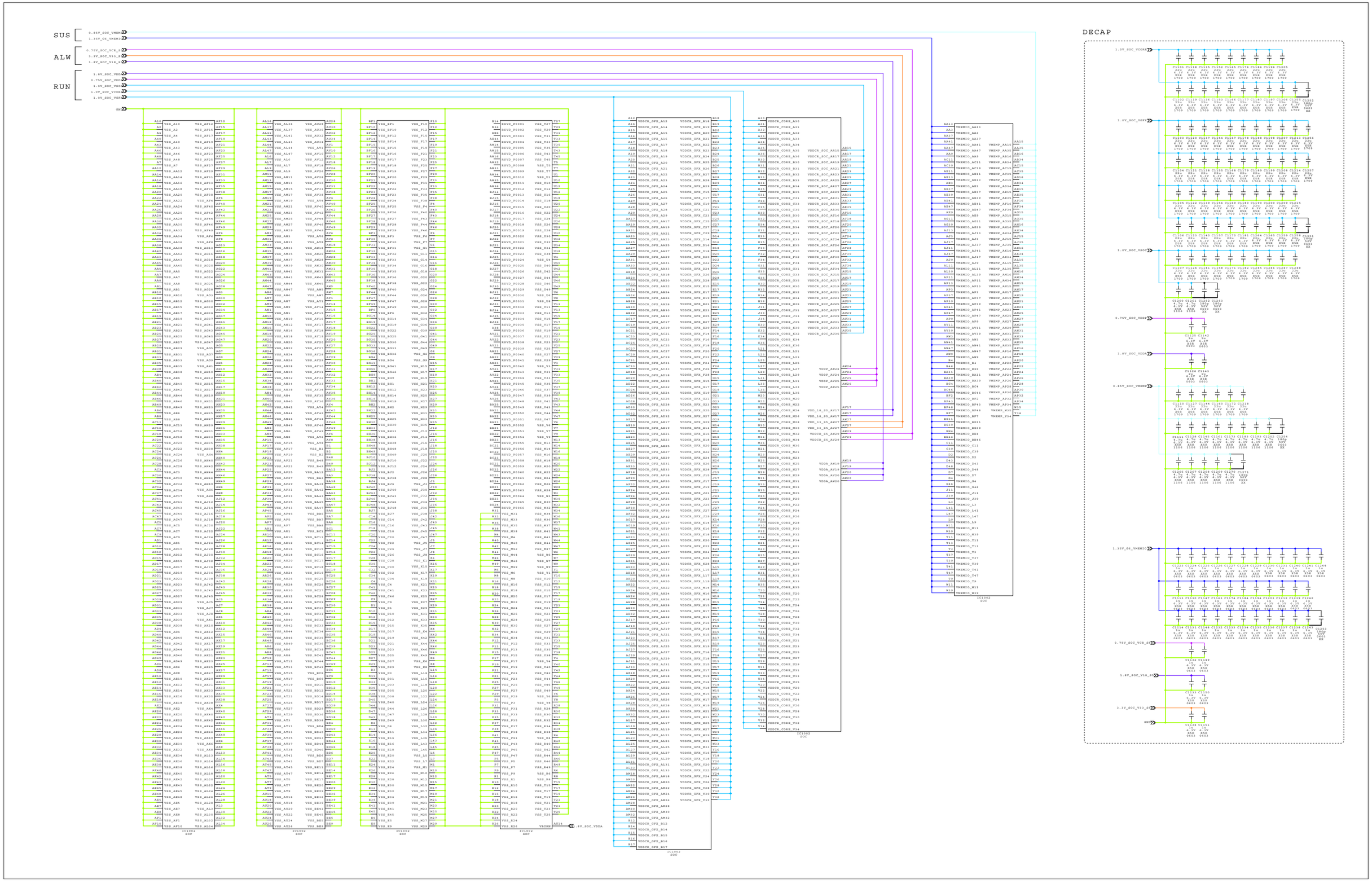

Reproduction Prohibited

1-3. EDM-010 Board (3/23)

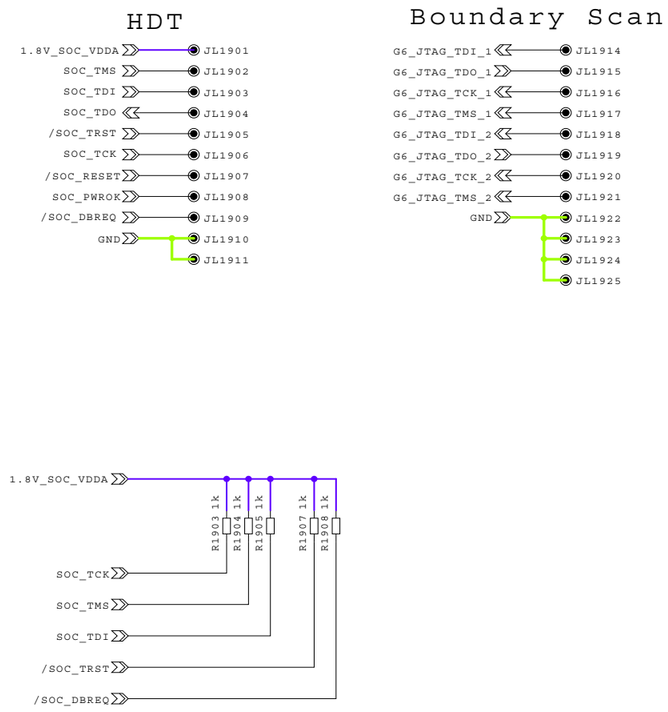

Reproduction Prohibited

1-4. EDM-010 Board (4/23)

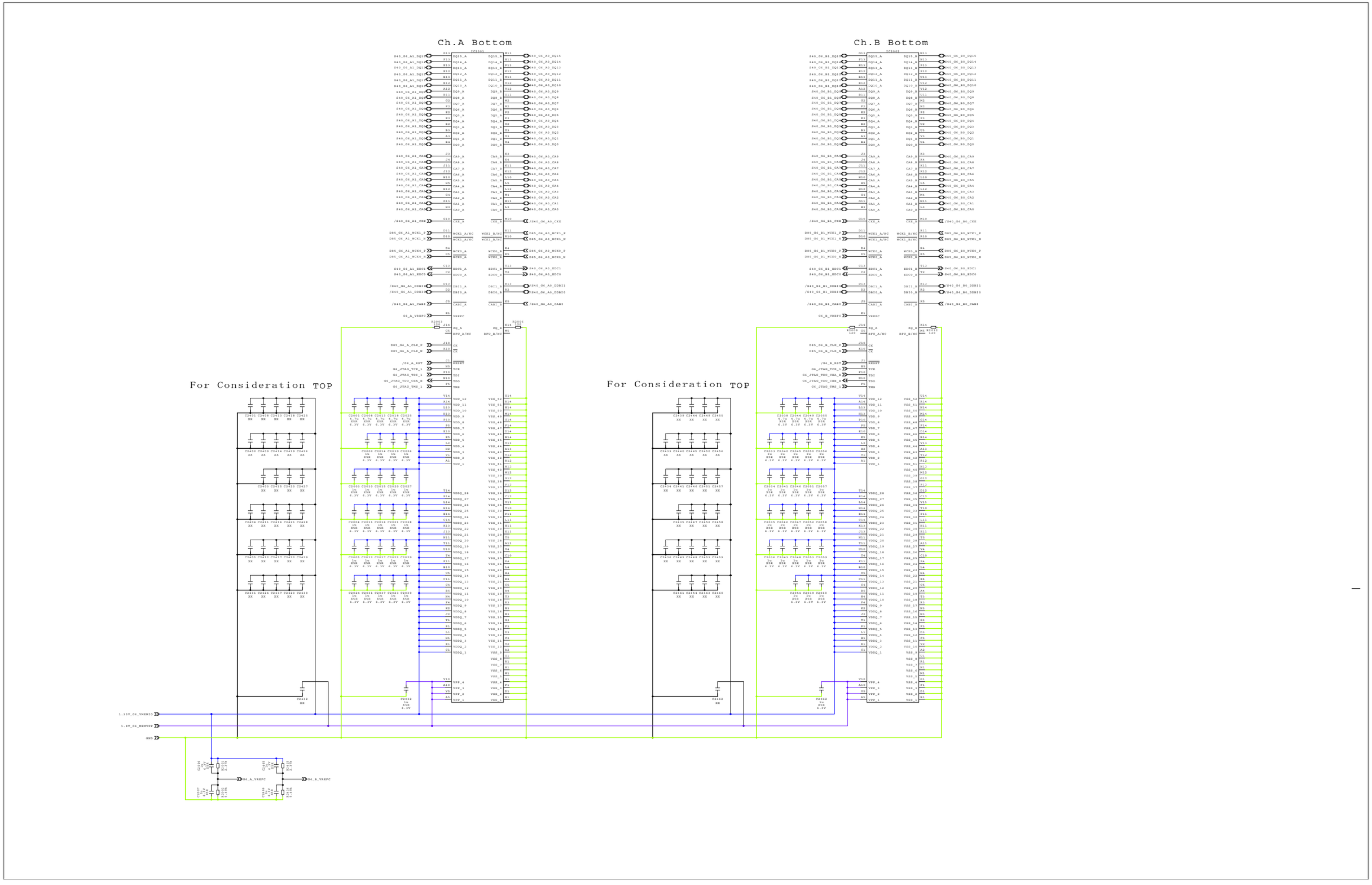

Reproduction Prohibited

1-5. EDM-010 Board (5/23)

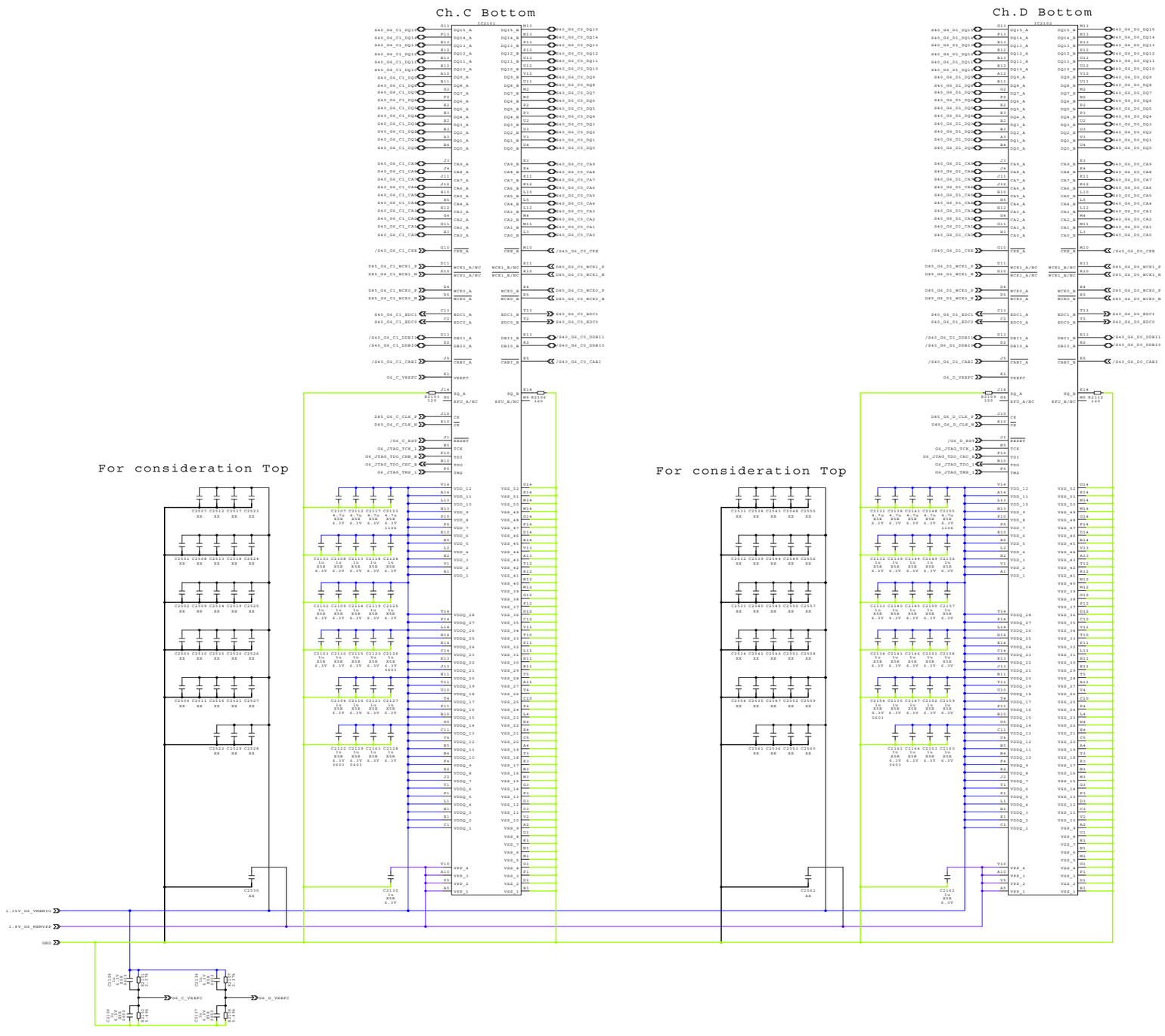

Reproduction Prohibited

1-6. EDM-010 Board (6/23)

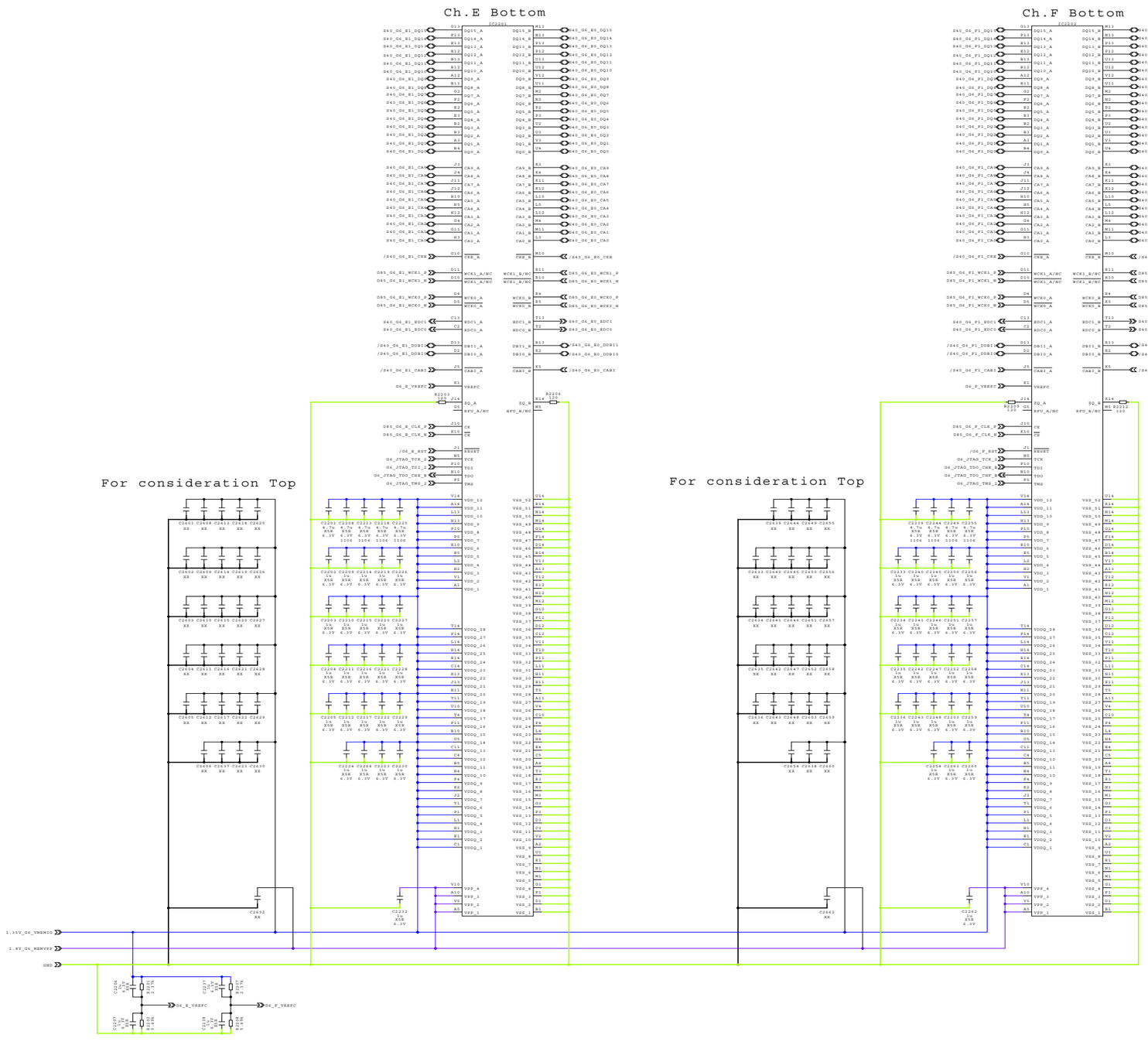

Reproduction Prohibited

1-7. EDM-010 Board (7/23)

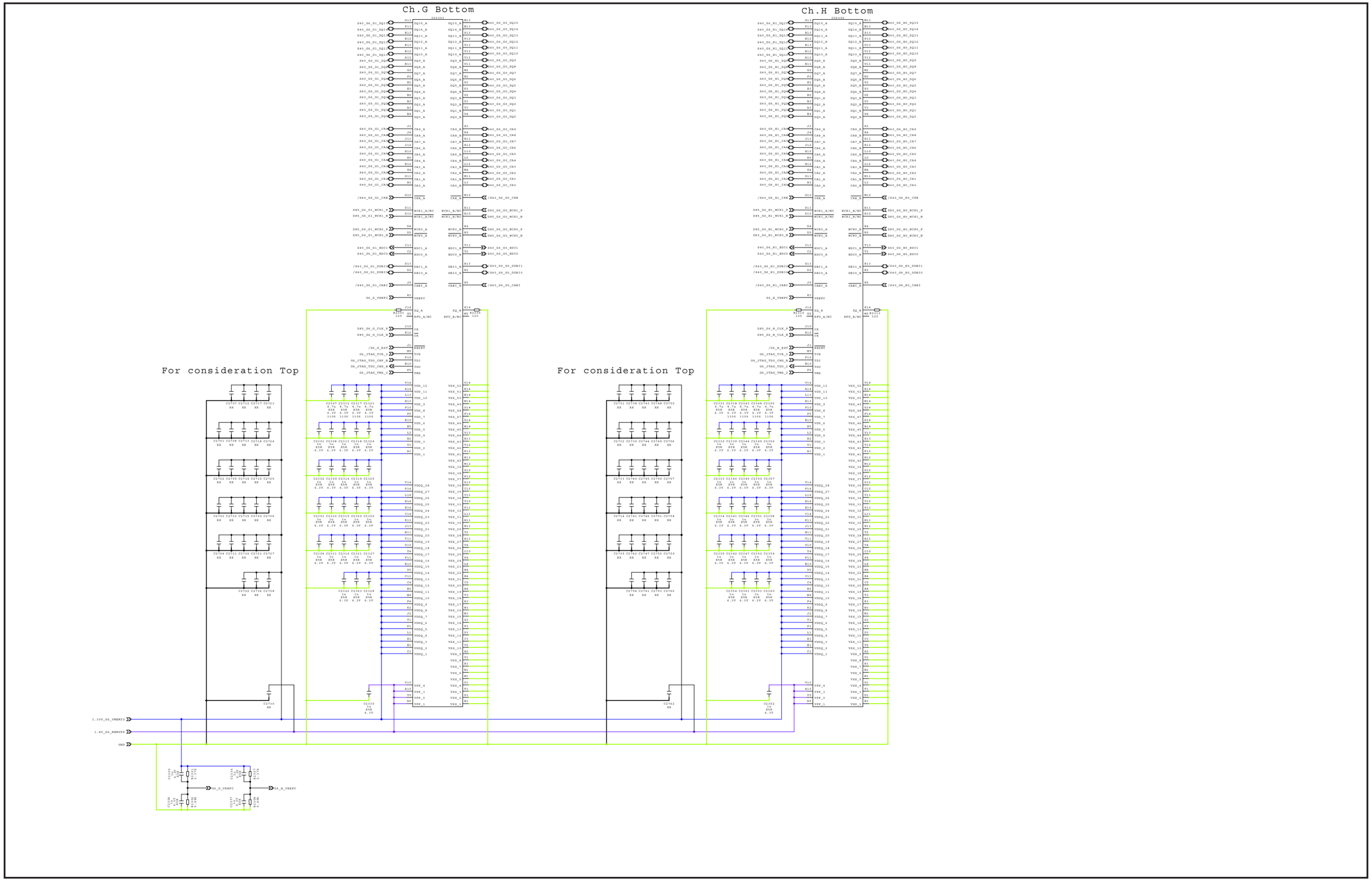

Reproduction Prohibited

1-8. EDM-010 Board (8/23)

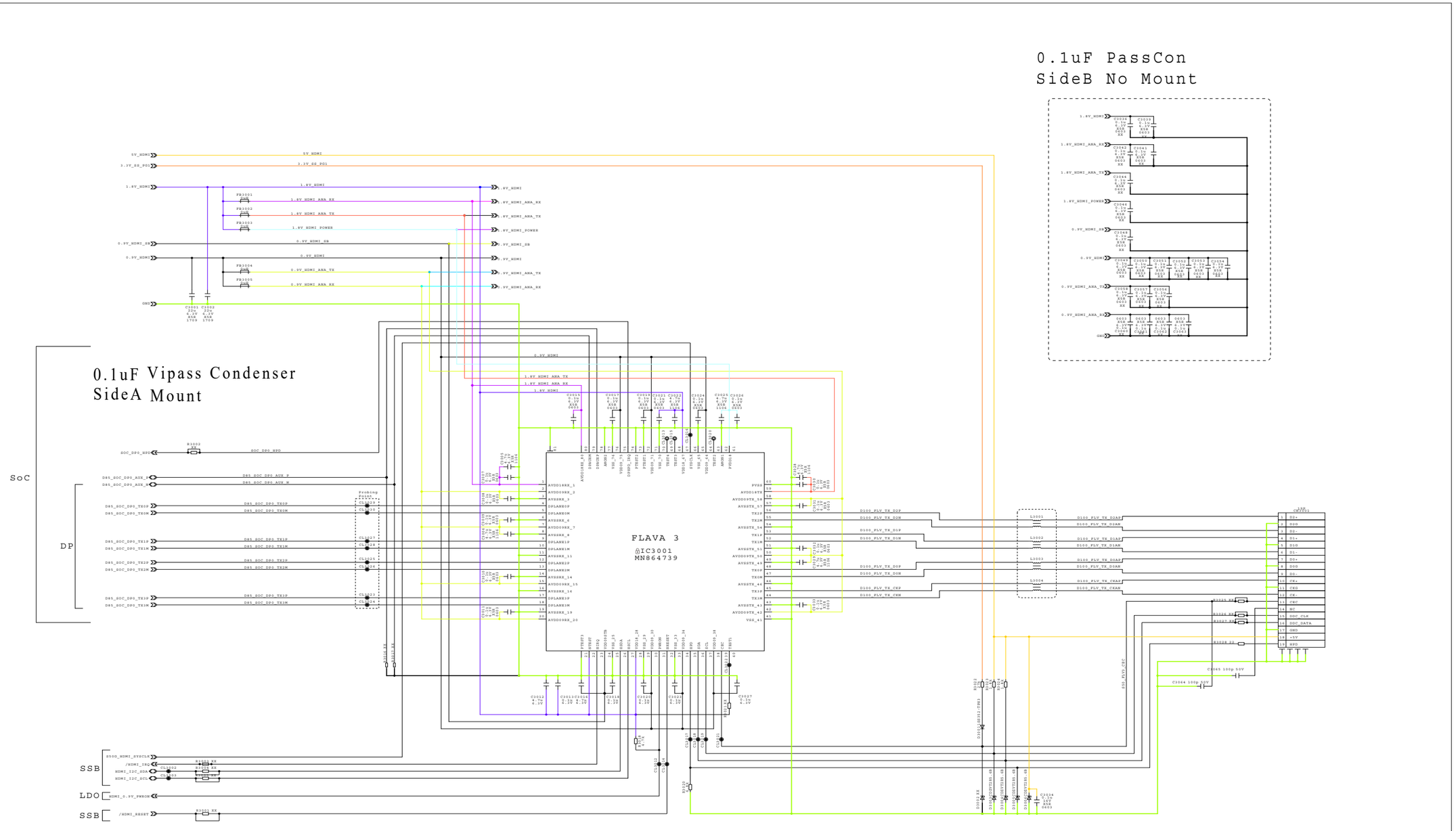

The components identified by mark ⚠ or dotted line with mark ⚠are critical for safety. Replace only with part number specified.	Les composants identifiés par une marque ⚠ sont critiques pour la sécurité. Ne les remplacer que par une piéce portant le numéro spécifié.

Reproduction Prohibited

1-9. EDM-010 Board (9/23)

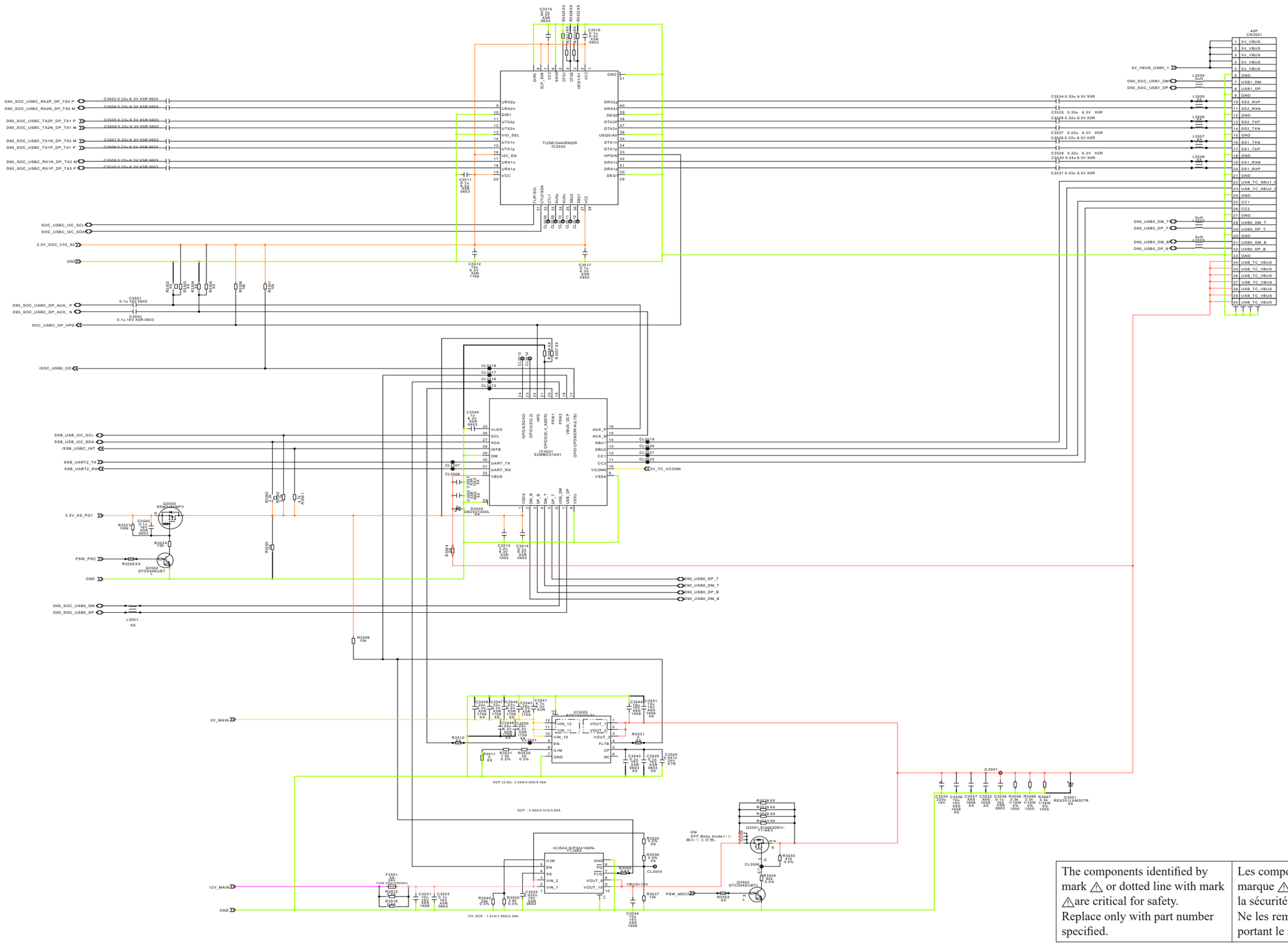

The components identified by mark ⚠ or dotted line with mark ⚠ are critical for safety. Replace only with part number specified.	Les composants identifiés par une marque ⚠ sont critiques pour la sécurité. Ne les remplacer que par une piéce portant le numéro spécifié.

Reproduction Prohibited

1-10. EDM-010 Board (10/23)

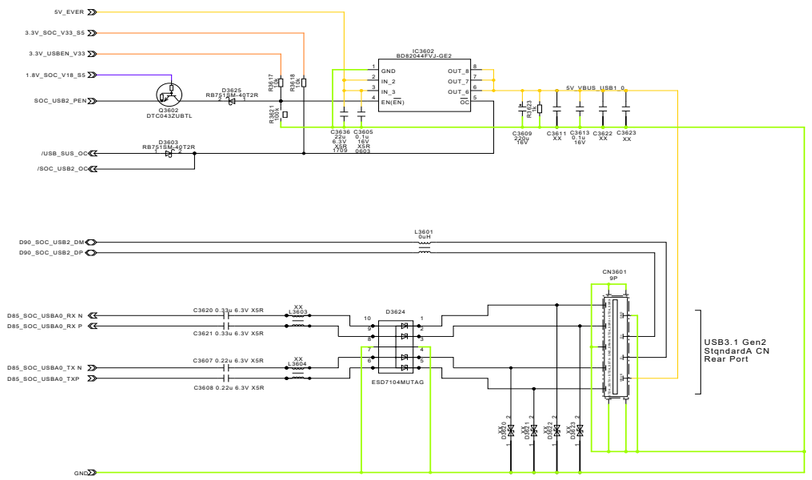

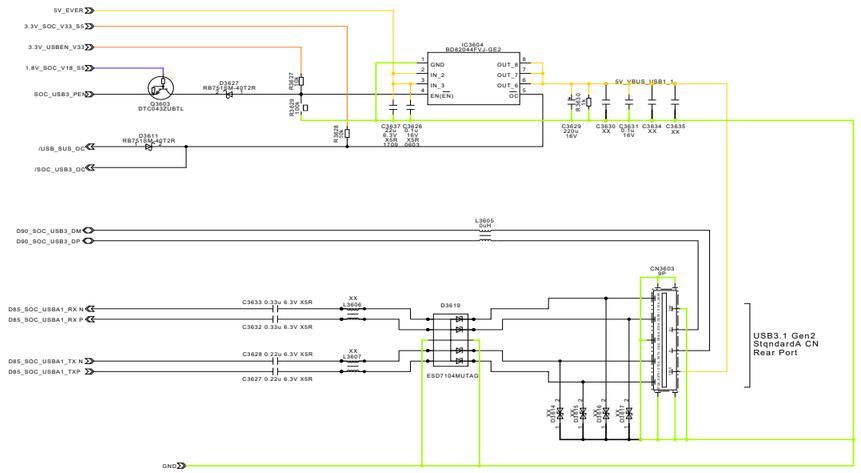

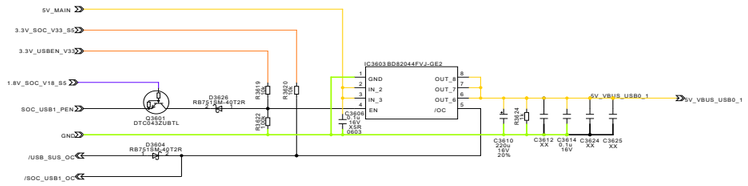

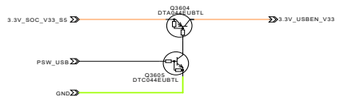

Reproduction Prohibited

1-11. EDM-010 Board (11/23)

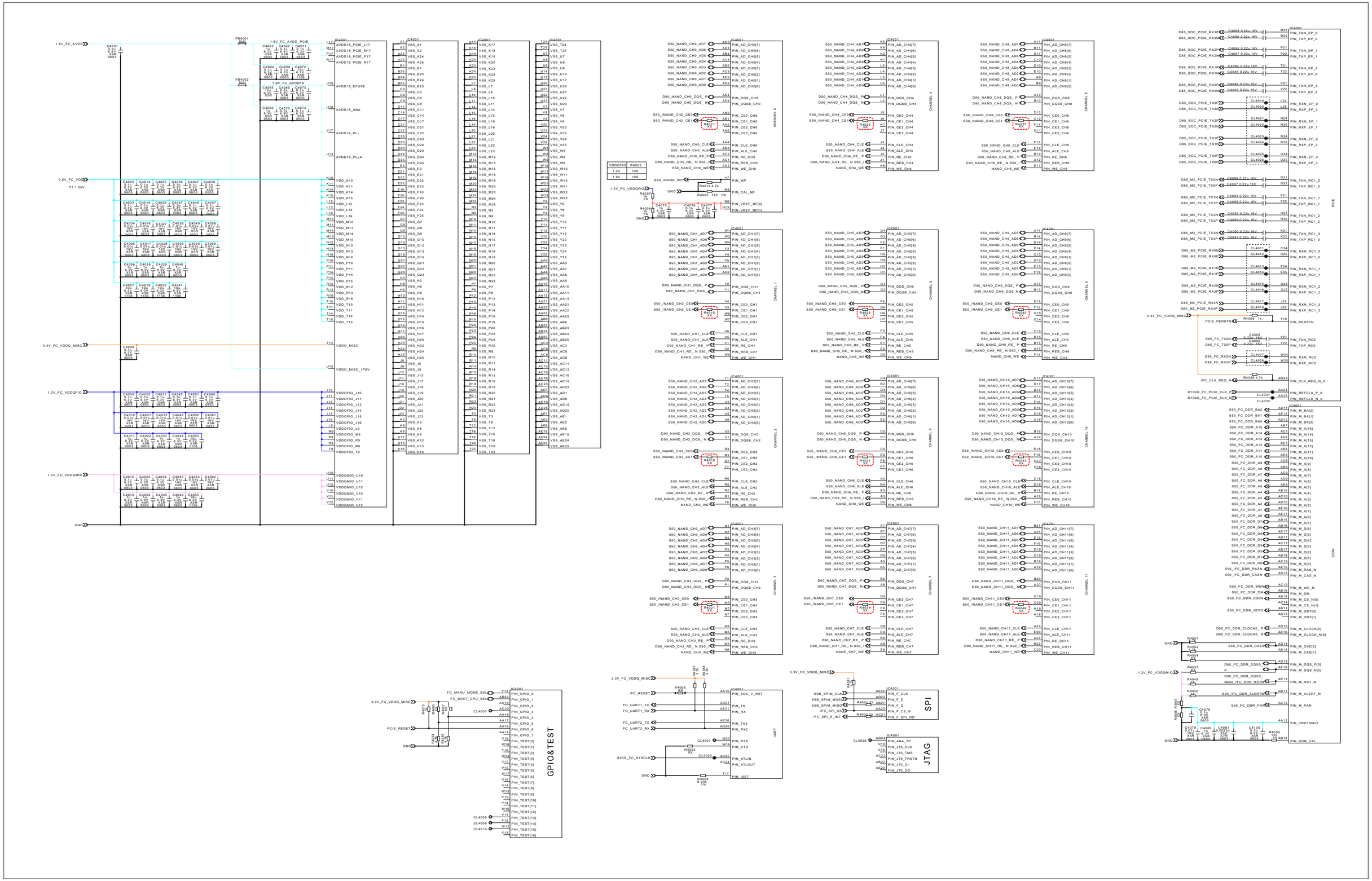

Reproduction Prohibited

1-12. EDM-010 Board (12/23)

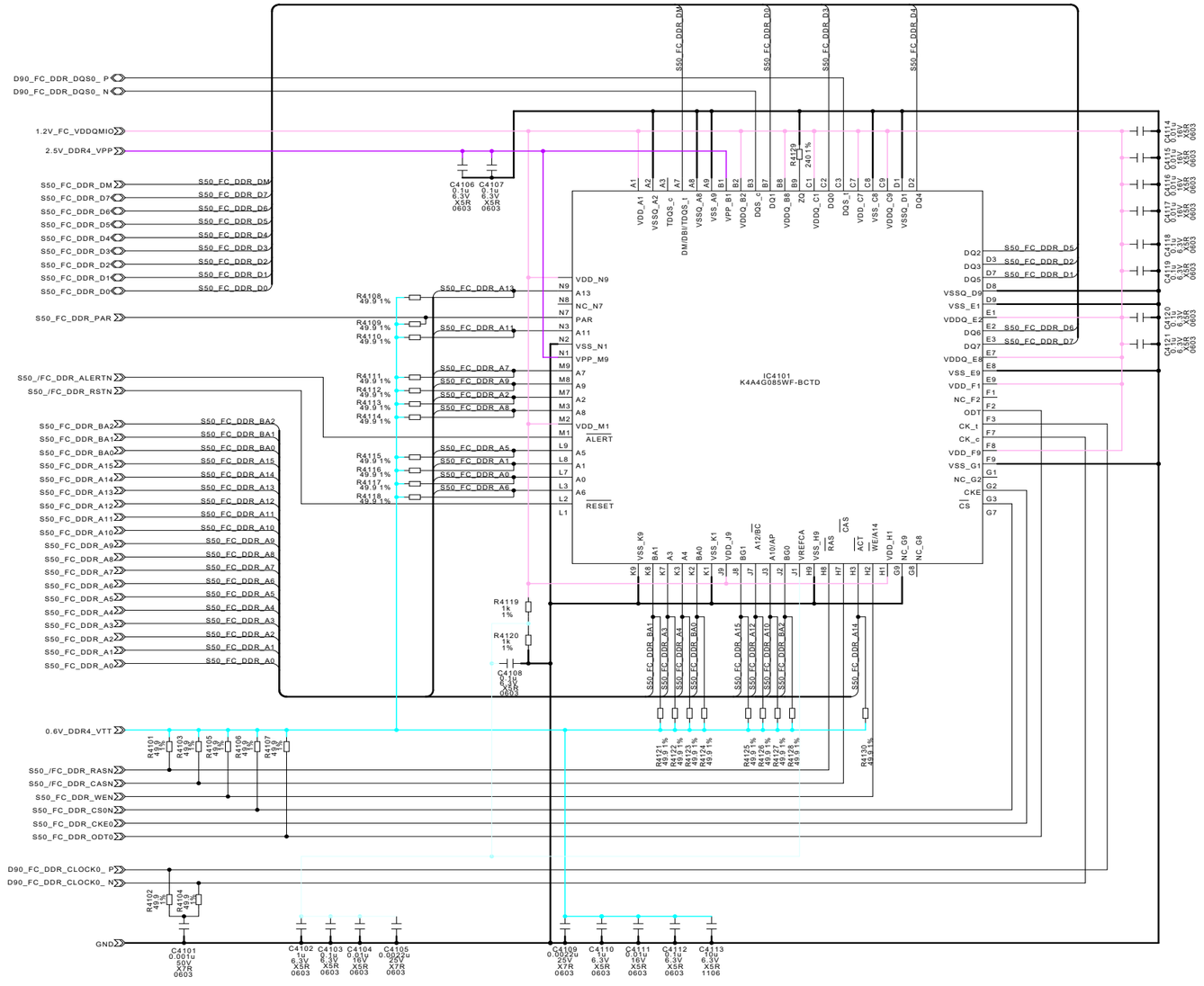

Reproduction Prohibited

1-13. EDM-010 Board (13/23)

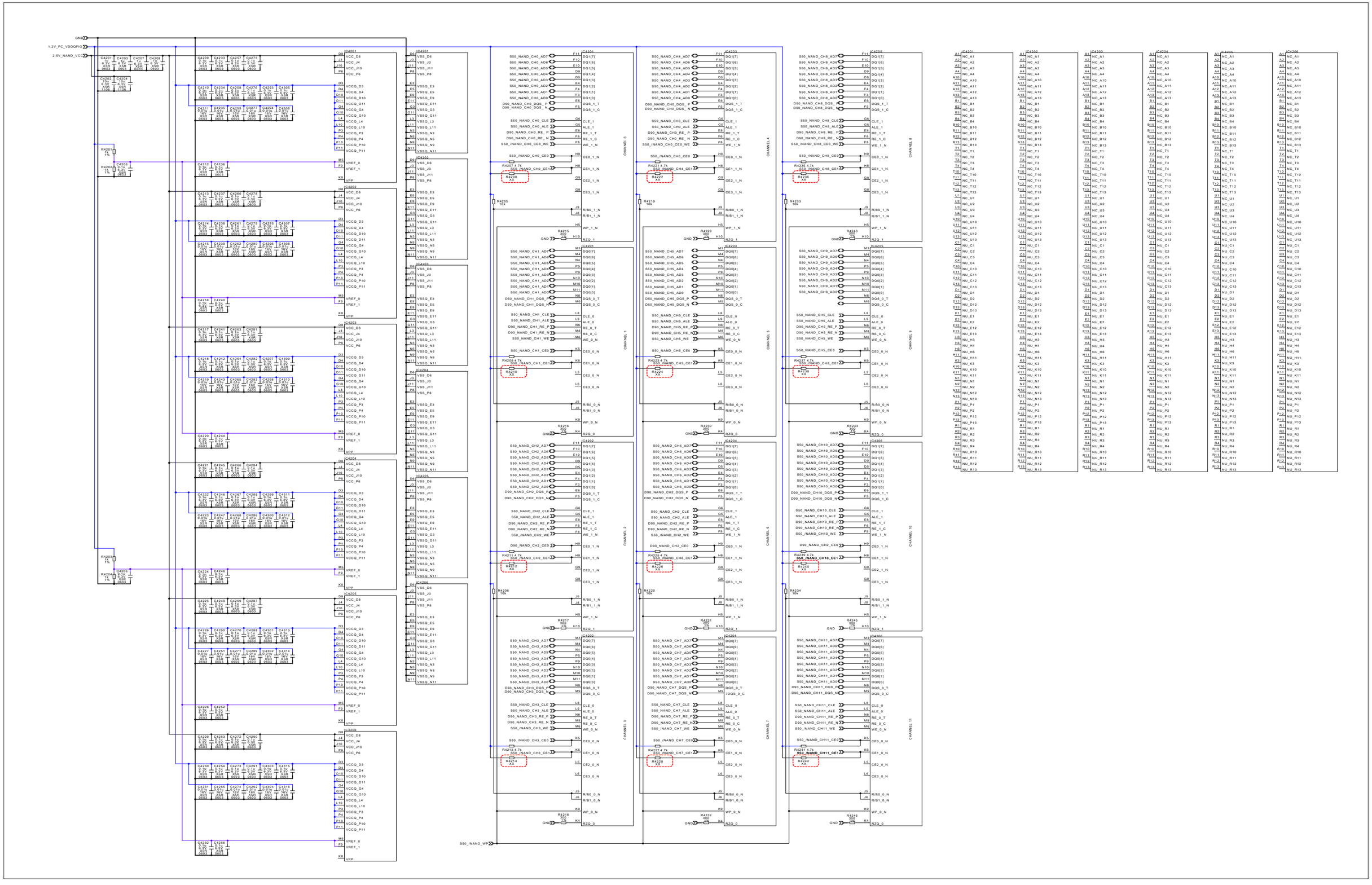

Reproduction Prohibited

1-14. EDM-010 Board (14/23)

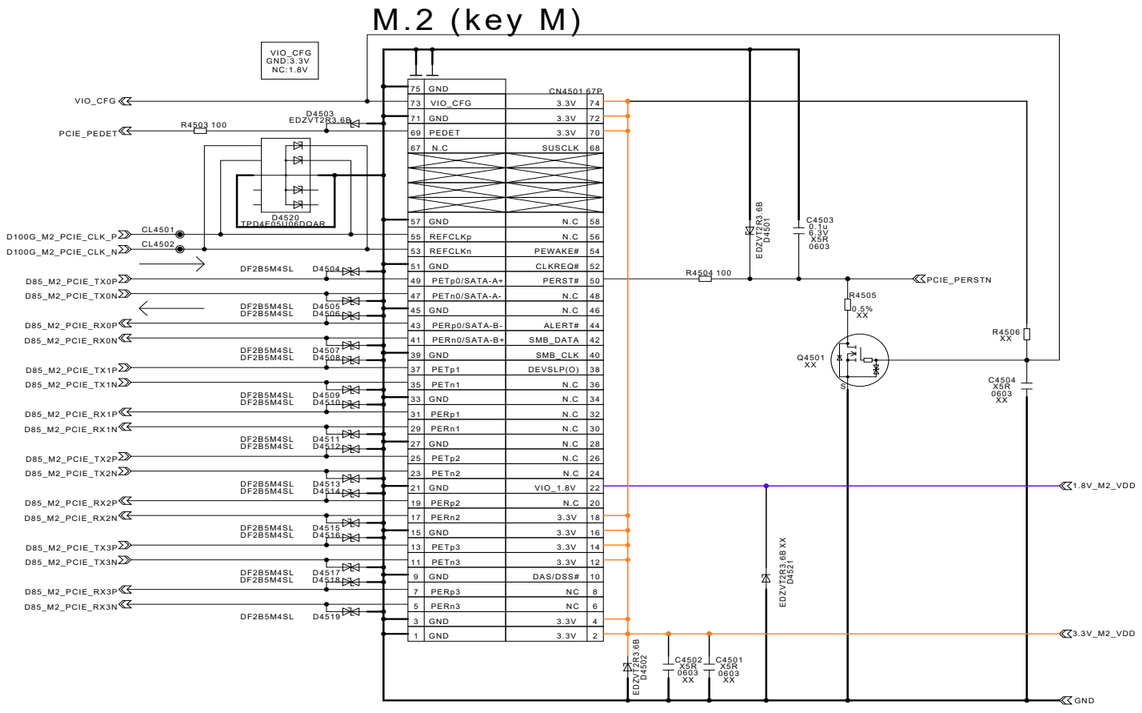

1-16. EDM-010 Board (15/23)

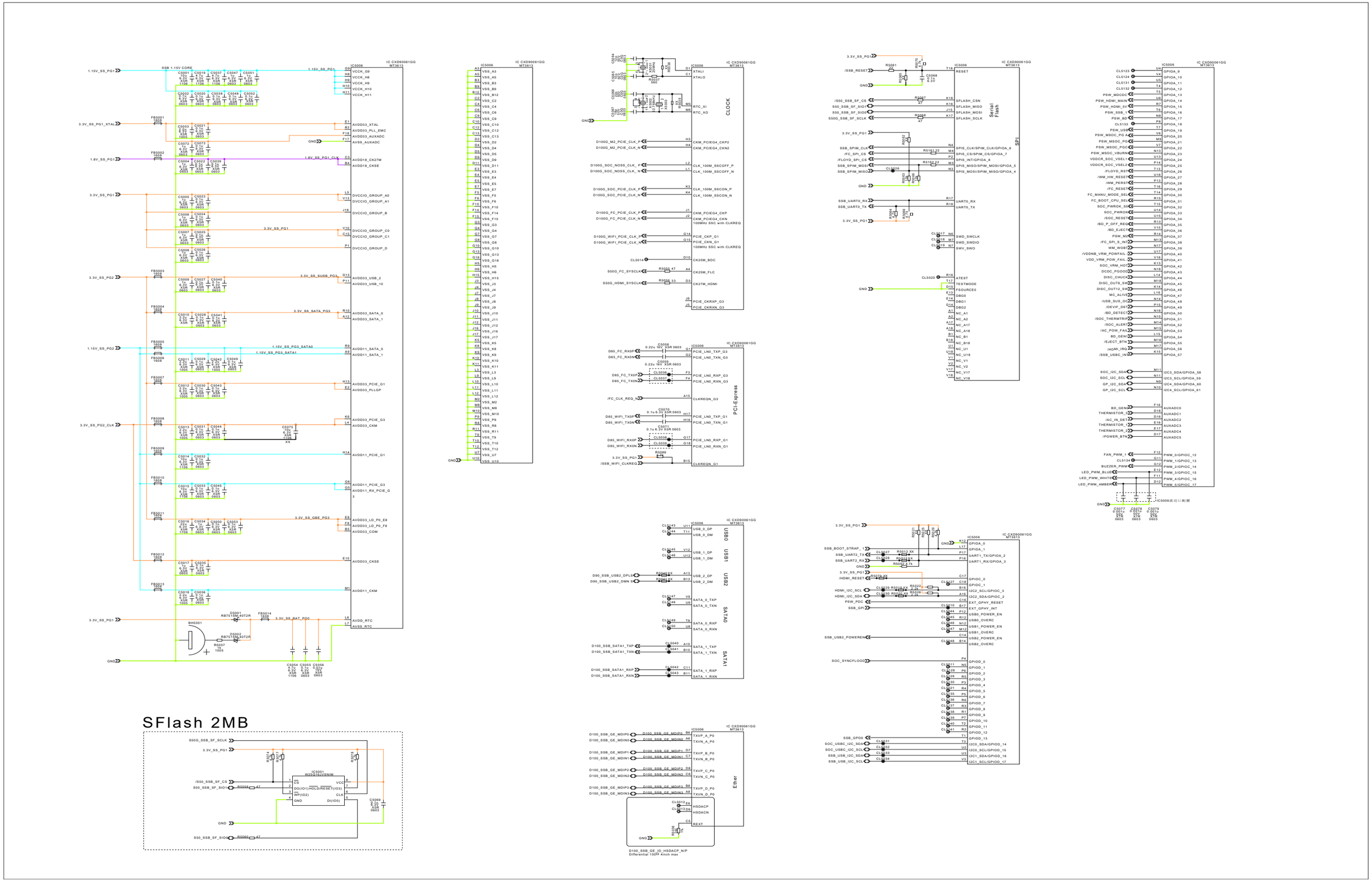

Reproduction Prohibited

1-16. EDM-010 Board (16/23)

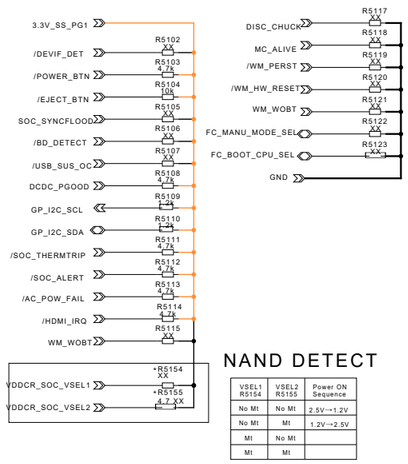

NAND DETECT

VSEL1 R5154	VSEL2 R5155	Power ON Sequence
No Mt	No Mt	2.5V→1.2V
No Mt	Mt	1.2V→2.5V
Mt	No Mt	
Mt	Mt	

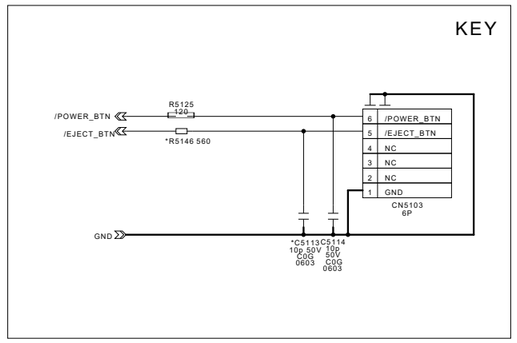

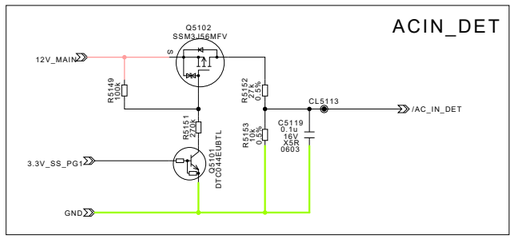

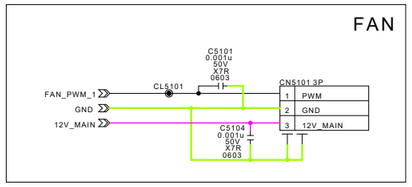

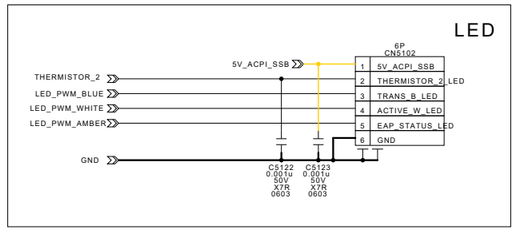

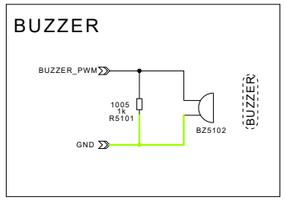

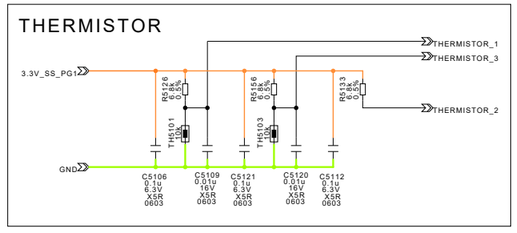

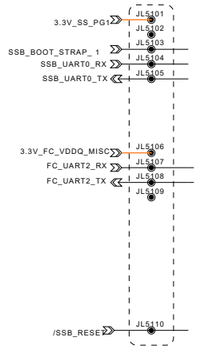

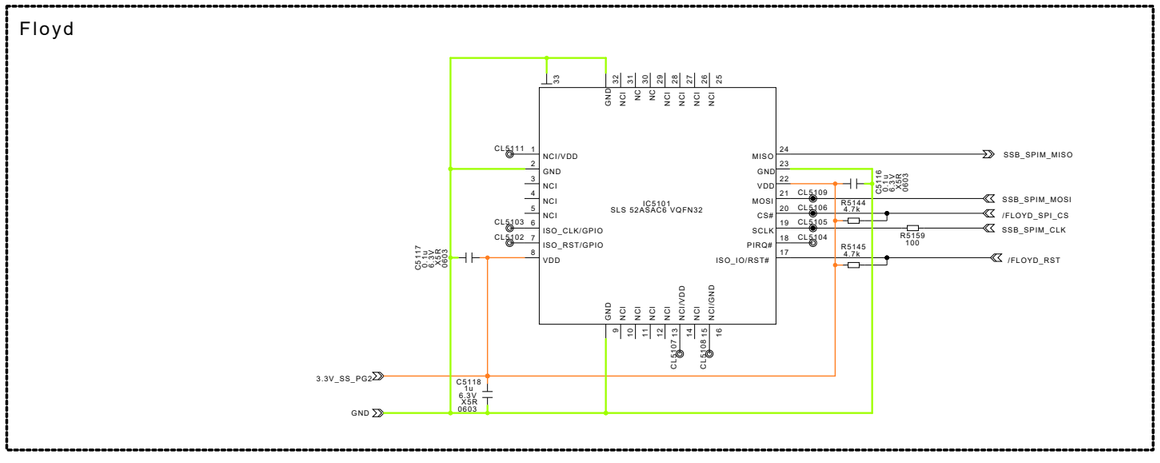

The components identified by mark ⚠ or dotted line with mark ⚠ are critical for safety. Replace only with part number specified.	Les composants identifiés par une marque ⚠ sont critiques pour la sécurité. Ne les remplacer que par une piéce portant le numéro spécifié.

Reproduction Prohibited

1-17. EDM-010 Board (17/23)

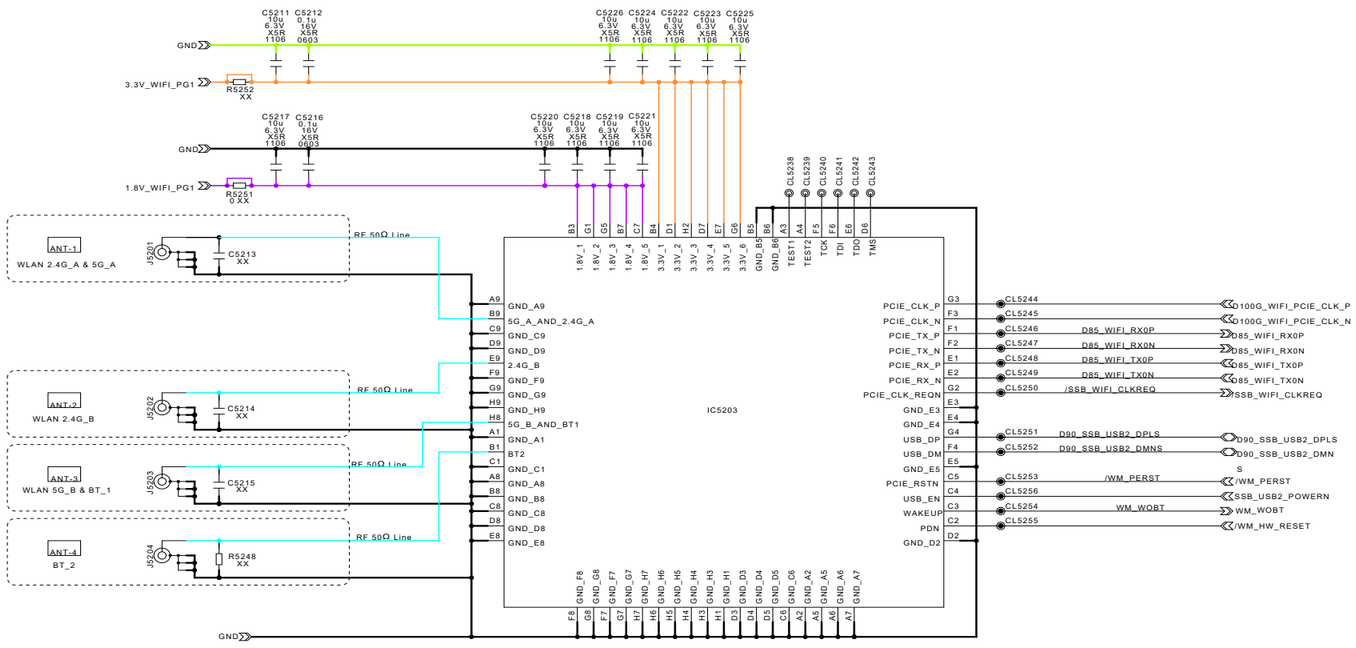

Reproduction Prohibited

1-18. EDM-010 Board (18/23)

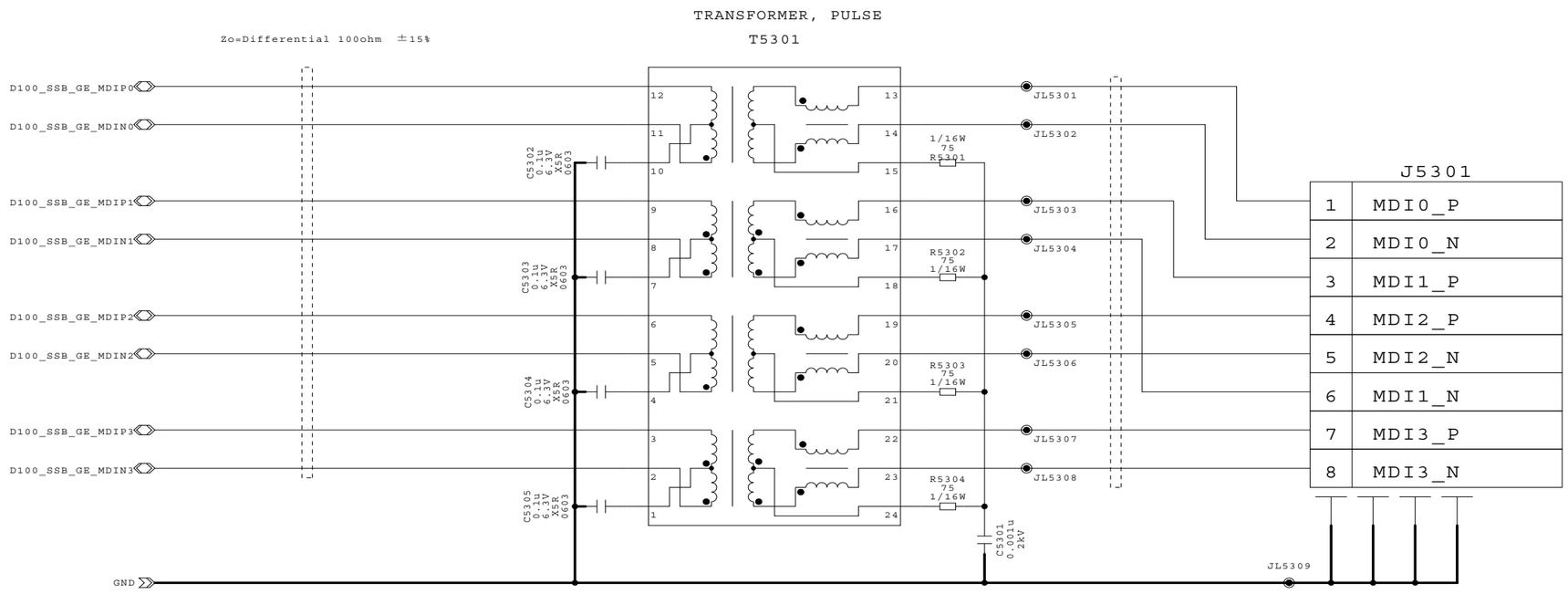

Reproduction Prohibited

1-19. EDM-010 Board (19/23)

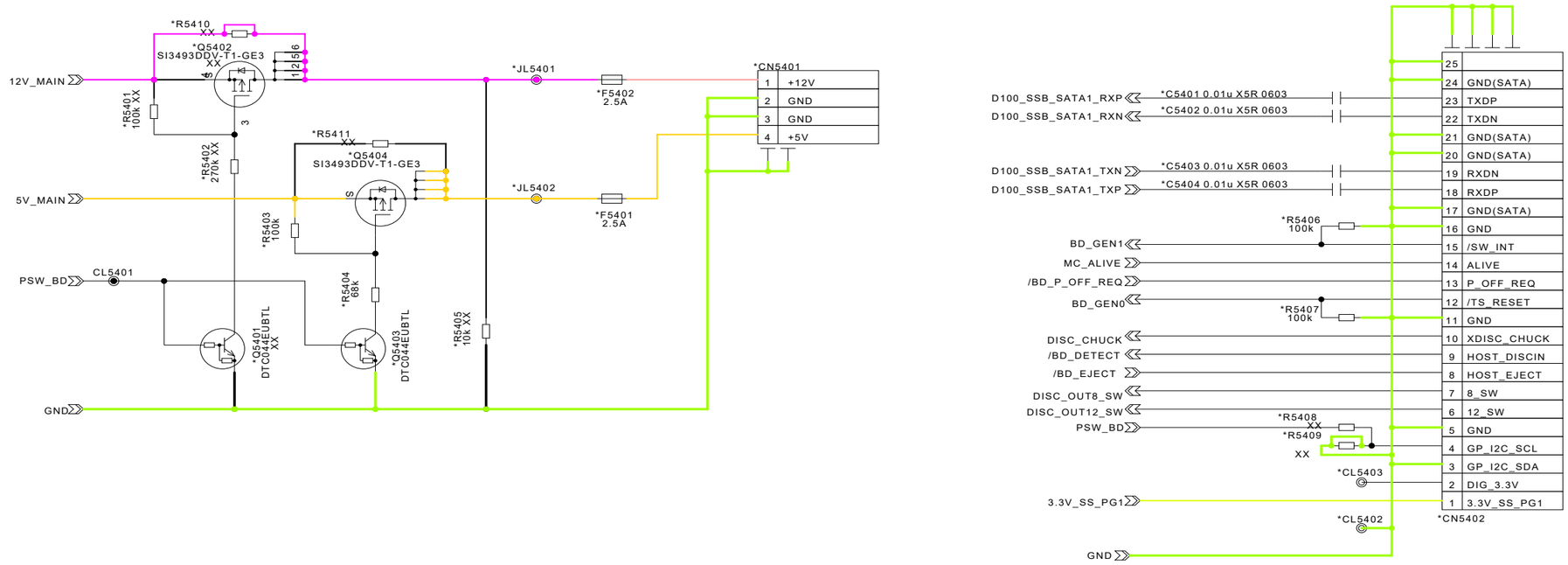

The components identified by mark ⚠ or dotted line with mark ⚠ are critical for safety.
Replace only with part number specified.

Les composants identifiés par une marque ⚠ sont critiques pour la sécurité.
Ne les remplacer que par une piéce portant le numéro spécifié.

Reproduction Prohibited

1-20. EDM-010 Board (20/23)

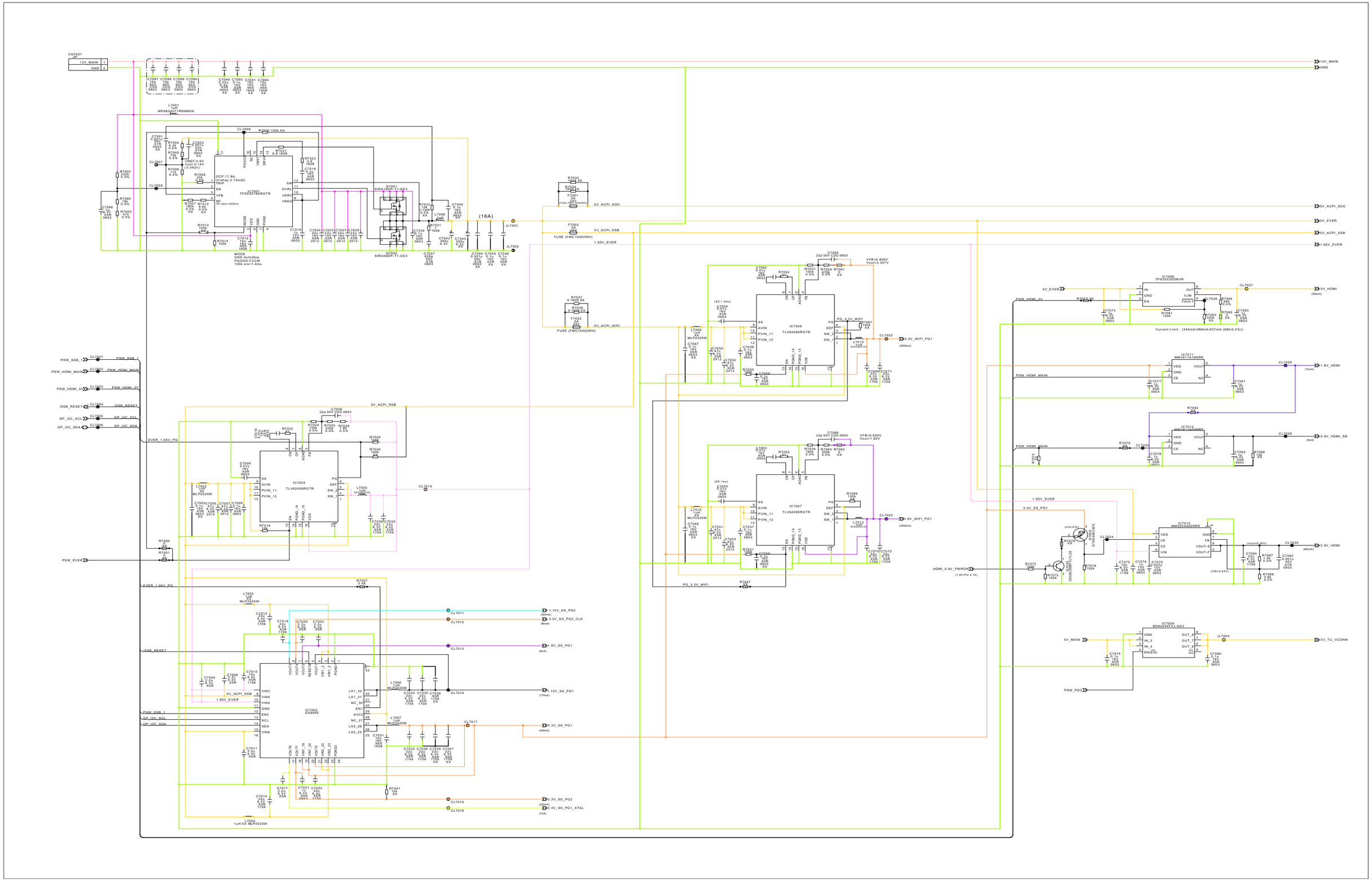

Reproduction Prohibited

1-21. EDM-010 Board (21/23)

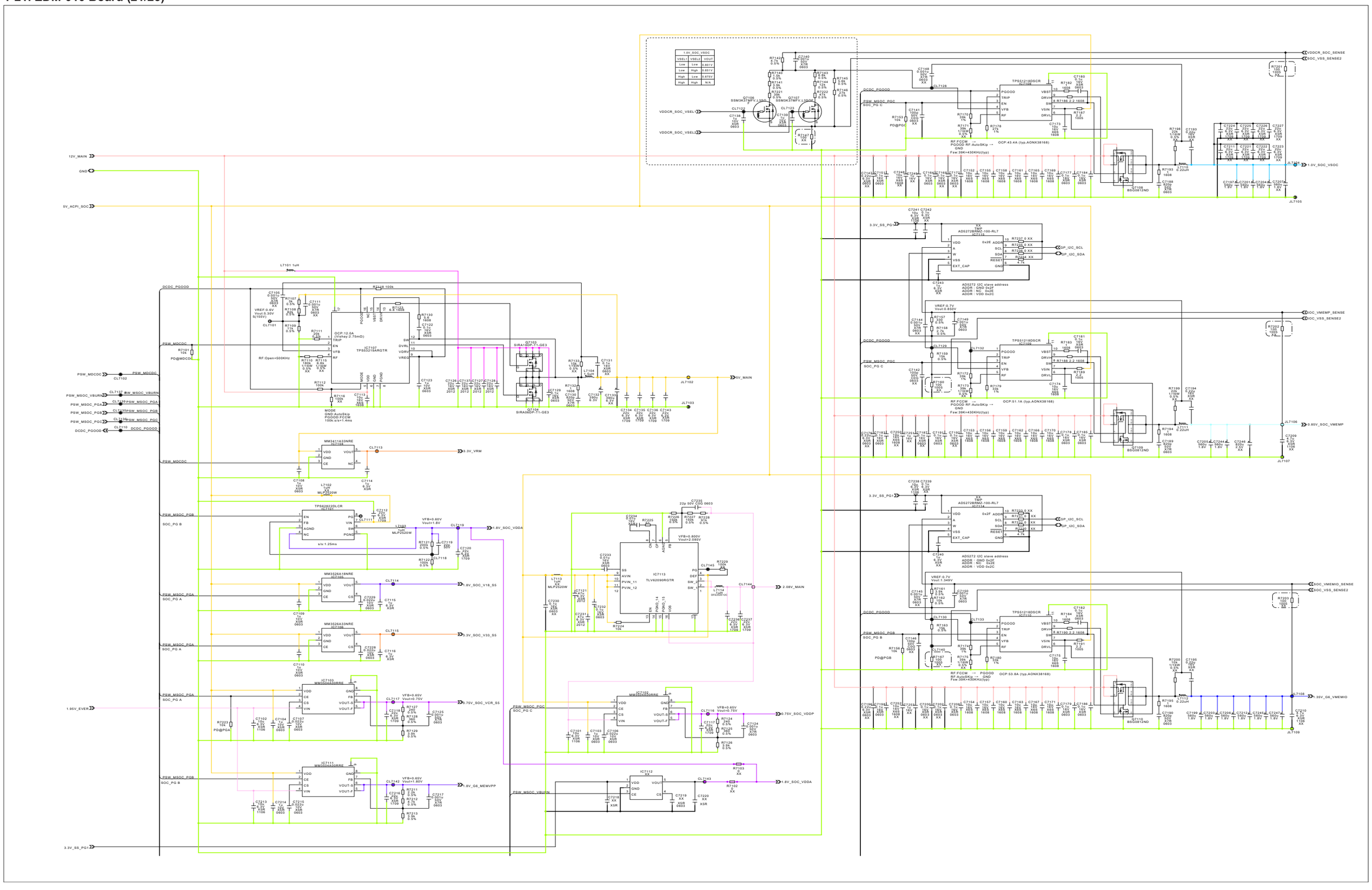

Reproduction Prohibited

1-22. EDM-010 Board (22/23)

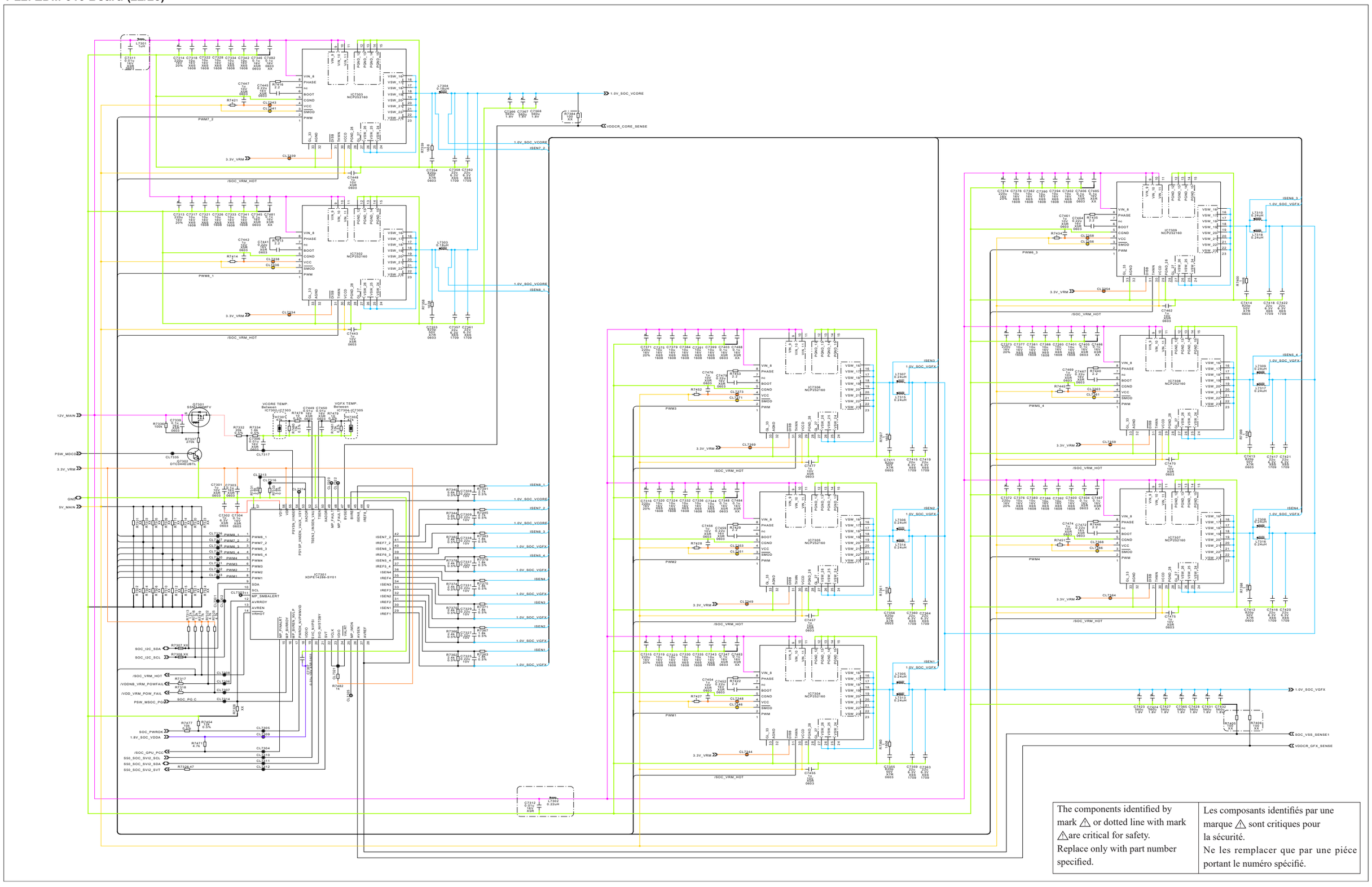

The components identified by mark ⚠ or dotted line with mark ⚠ are critical for safety. Replace only with part number specified.	Les composants identifiés par une marque ⚠ sont critiques pour la sécurité. Ne les remplacer que par une piéce portant le numéro spécifié.

1-23. EDM-010 Board (23/23)

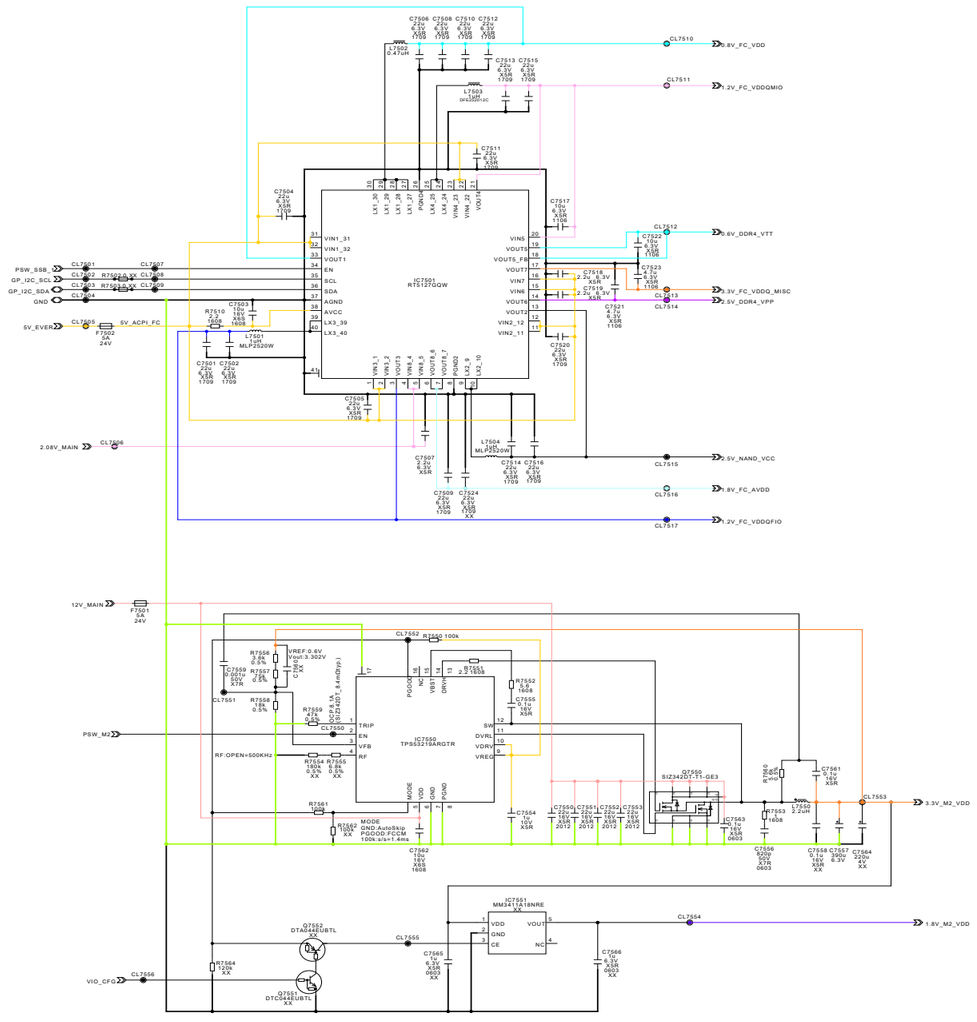

The components identified by mark ⚠ or dotted line with mark ⚠are critical for safety. Replace only with part number specified.	Les composants identifiés par une marque ⚠ sont critiques pour la sécurité. Ne les remplacer que par une piéce portant le numéro spécifié.

Reproduction Prohibited

1-24. EDS-010 Board(1/1)

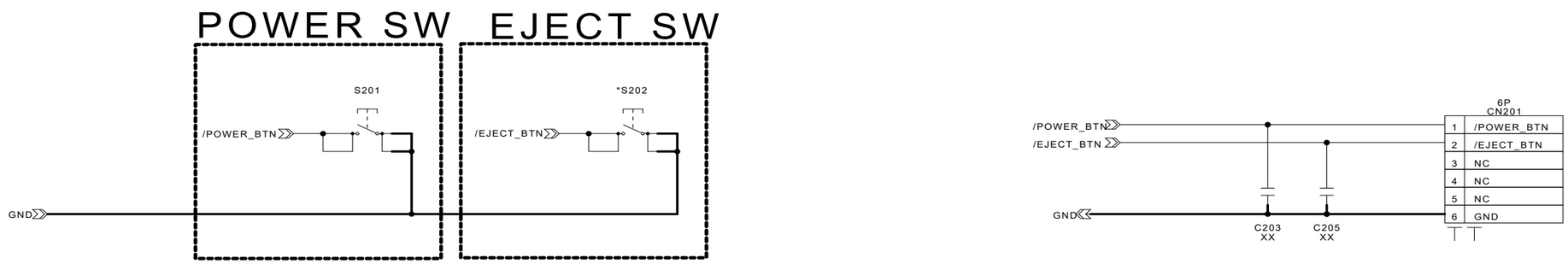

Reproduction Prohibited

1-25. EDL-010 Board(1/1)

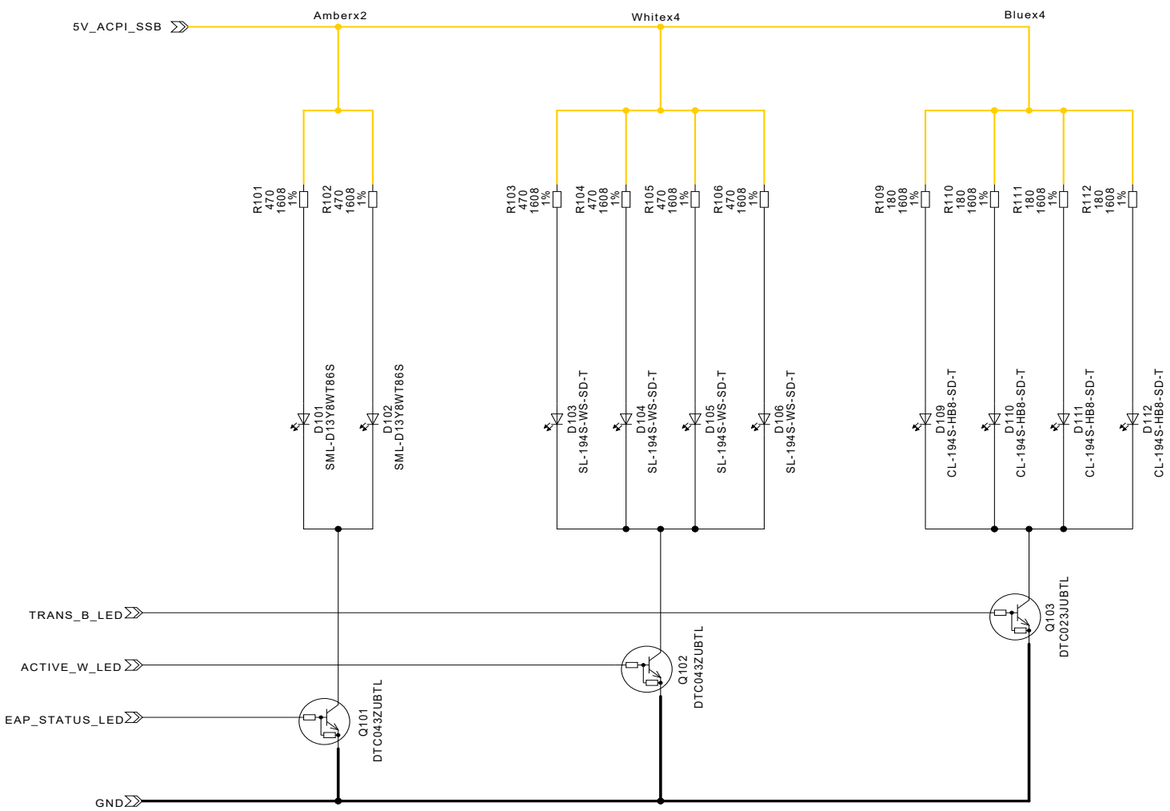

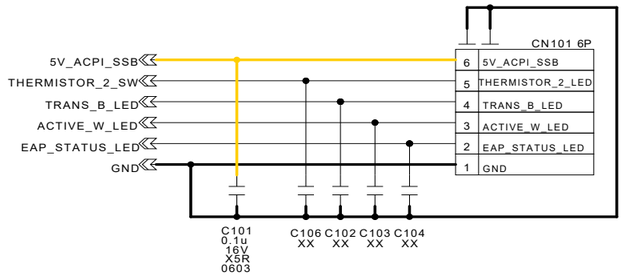

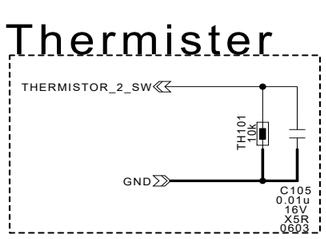

Reproduction Prohibited

1-26. EDU-010 Board(1/1)

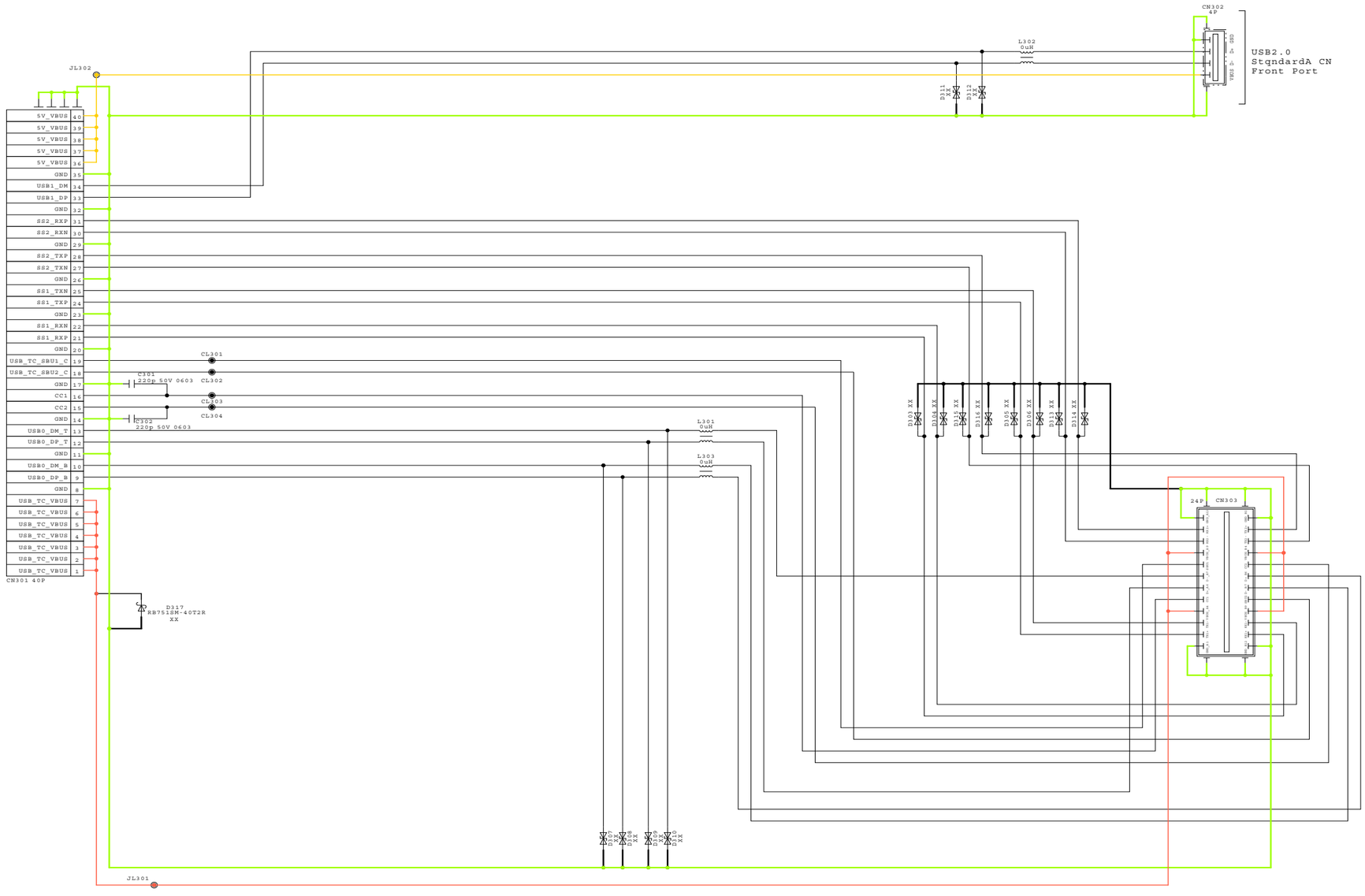

Reproduction Prohibited

SECTION 2
PRINTED WIRING BOARDS

2-1. EDM-010 Board (Side A)

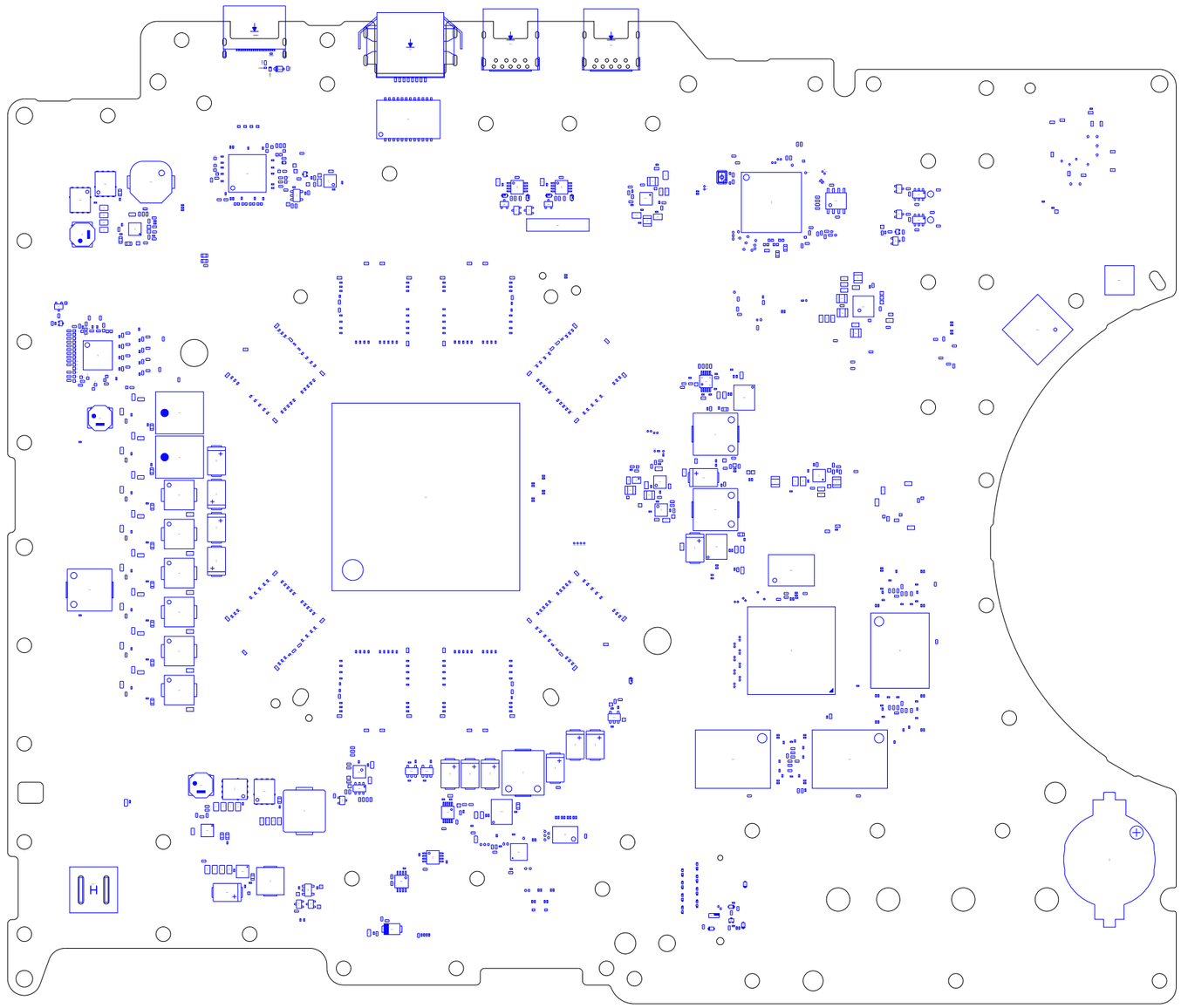

Reproduction Prohibited

2-2. EDM-010 Board (Side B)

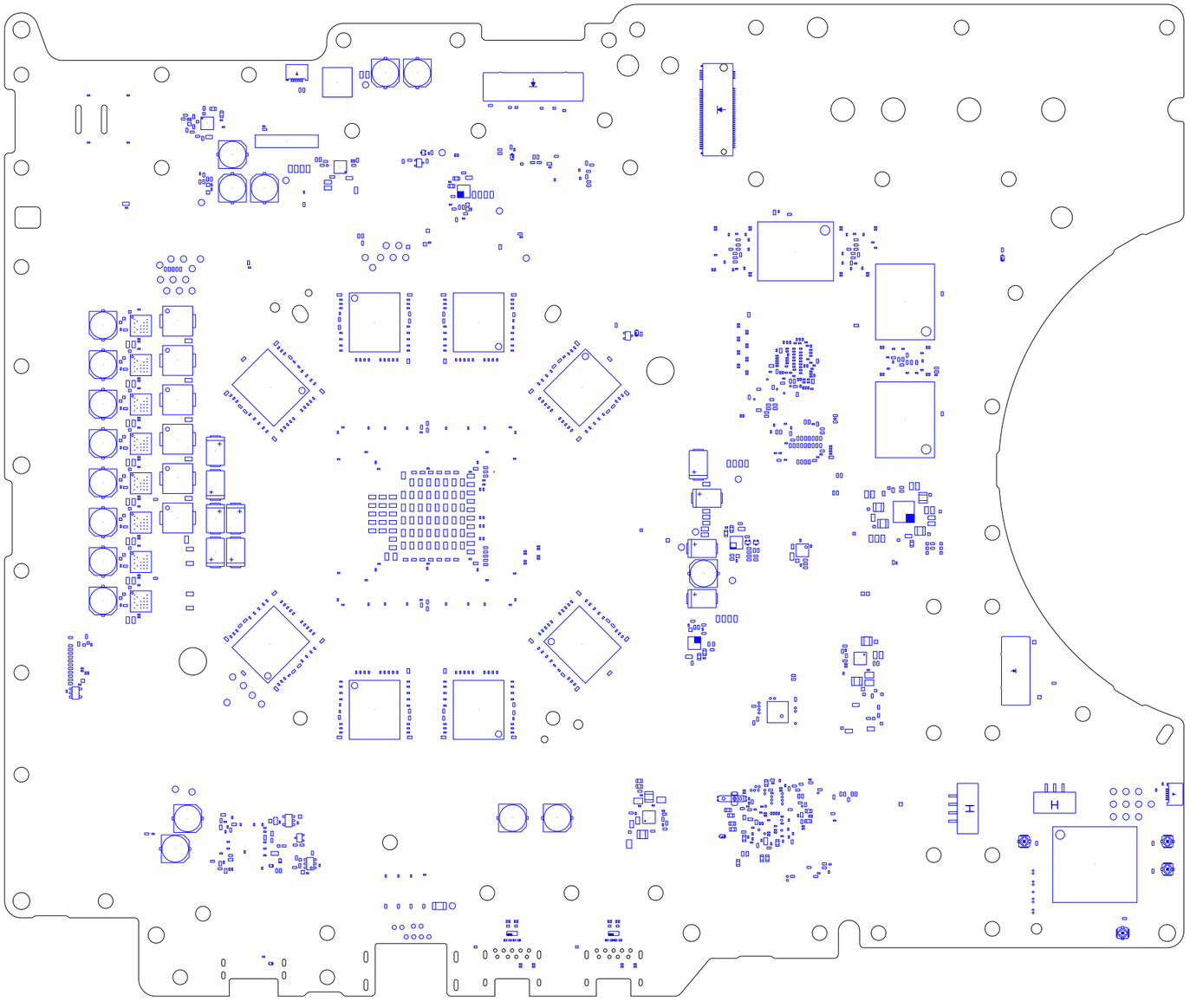

Reproduction Prohibited

2-3. EDS-010 Board (Side A)

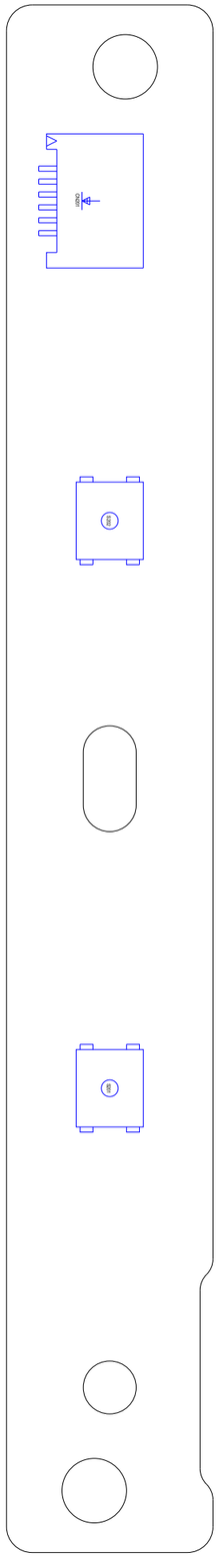

2-4. EDS-010 Board (Side B)

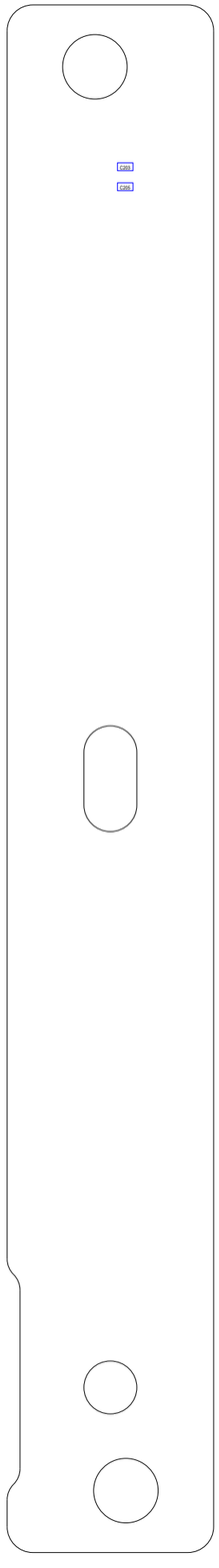

2-7. EDL-010 Board (Side A)

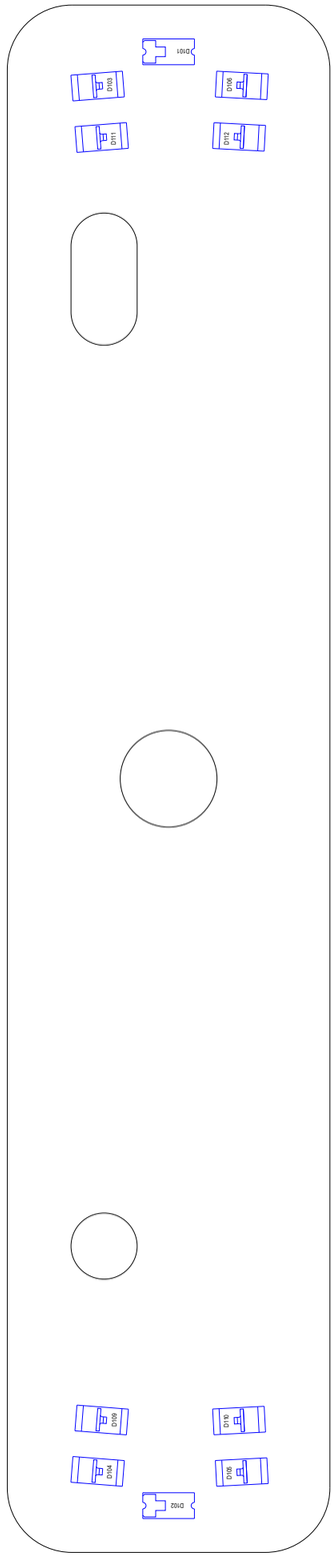

2-8. EDL-010 Board (Side B)

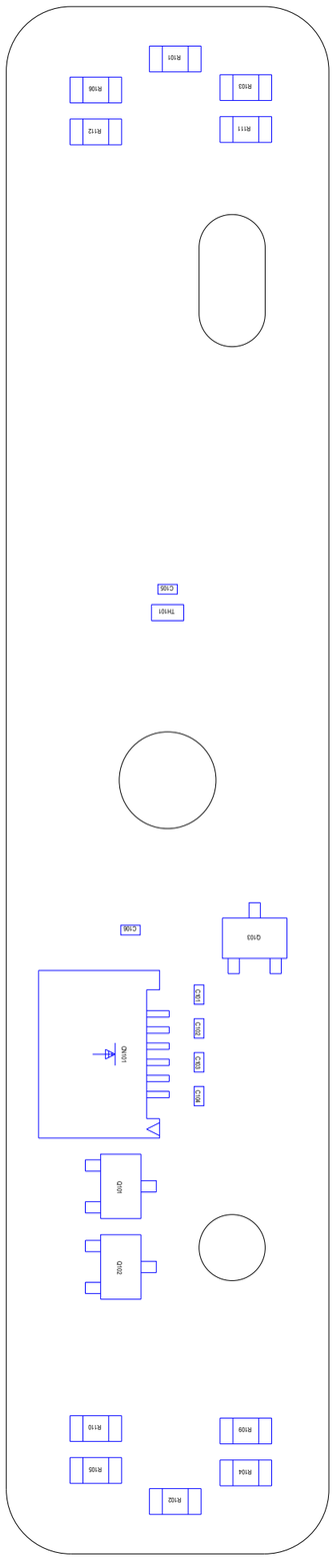

Reproduction Prohibited

2-9. EDU-010 Board (Side A)

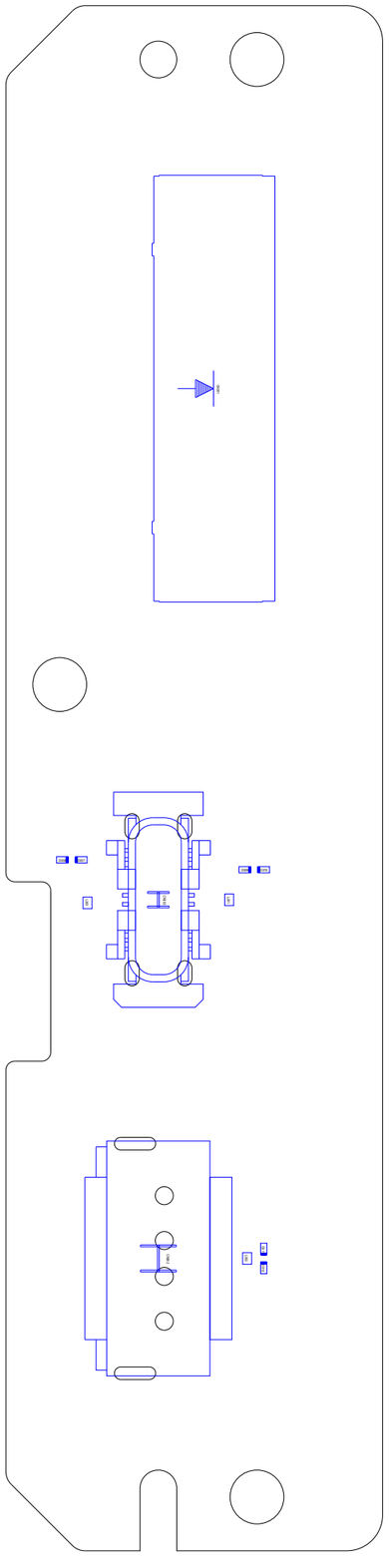

2-10. EDU-010 Board (Side B)

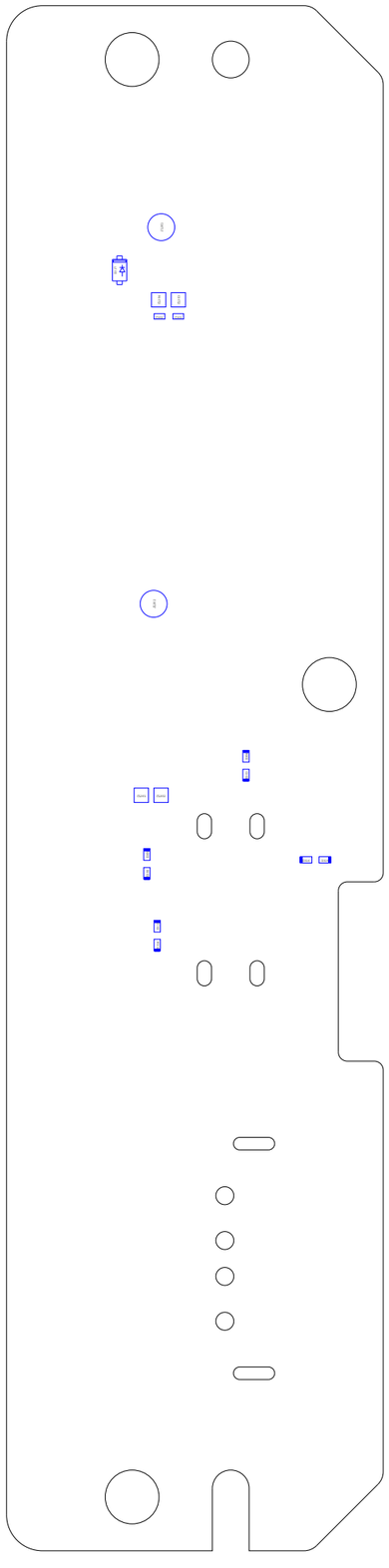

Reproduction Prohibited

SECTION 3
ELECTRICAL PARTS LIST

NOTE:
- Due to standardization, replacements in the parts list may be defferent from the parts specified in the diagrams or the components used on the set.
- RESISTORS
  METAL: Metal-film resistor.
  F: nonflammable
- SEMICONDUCTORS
  In each case, u : μ, for example:
  uA.. : μA.. uPA.. : μPA..
  uPB.. : μPB.. uPC.. : μPC.. uPD.. : μPD..
- CAPACITORS
  uF : μF
- COILS
  uH : μH

The components identified by mark ⚠ or dotted line with mark ⚠ are critical for safety.
Replace only with part number specified.

Les composants identifiés par une marque ⚠ sont critiques pour la sécurité.
Ne les remplacer que par une piéce portant le numéro spécifié.

When indicating parts by reference number, please include the board.

SPECIAL COMPONENT NOTICE

The components identified by mark 🔒 contain confidential information.
Strictly follow the instructions whenever the components are repaired and/or replaced.

NOTE:
- SC Classification:
  S : Supplied parts
  U : Unsupplied parts
- Remark
  ＊ : With Drive Parts

SC	Ref. No.	Part No.	Description	Remark	
			< EDM-010 (E) >		
U ⚠		🔒 A-5021-709-A	EDM-010 COMPL(E)(S)	＊	
U ⚠		🔒 A-5024-585-A	EDM-010 COMPL(E)(M)	＊	
U ⚠		🔒 A-5024-589-A	EDM-010 COMPL(E)(H)	＊	
U ⚠		🔒 A5023189A	EDM-010 MOUNT(D)(S)		
U ⚠		🔒 A5024595A	EDM-010 MOUNT(D)(M)		
U ⚠		🔒 A5024599A	EDM-010 MOUNT(D)(H)		
			< BATTERY HOLDER >		
U	BH5001	1-756-889-12	HOLDER, LITHIUM BATTERY(CR203)		
S	BH5001	1-853-561-11	HOLDER,LITHIUM BATTERY(CR2032)		
			< BUZZER >		
S	BZ5102	1-825-579-11	BUZZER, PIEZOELECTRIC		
			< CAPACTOR >		
U	C1001		CERAMIC CHIP 100PF C0G 0603	5%	50V
U	C1002		CERAMIC CHIP 100PF C0G 0603	5%	50V
U	C1003		CERAMIC CHIP 100PF C0G 0603	5%	50V
U	C1009		CERAMIC CHIP 0.22MF X5R (0603)	10%	16V
U	C1010		CERAMIC CHIP 0.22MF X5R (0603)	10%	16V
U	C1011		CERAMIC CHIP 0.22MF X5R (0603)	10%	16V
U	C1012		CERAMIC CHIP 0.22MF X5R (0603)	10%	16V
U	C1013		CERAMIC CHIP 0.22MF X5R (0603)	10%	16V
U	C1014		CERAMIC CHIP 0.22MF X5R (0603)	10%	16V
U	C1015		CERAMIC CHIP 0.22MF X5R (0603)	10%	16V
U	C1016		CERAMIC CHIP 0.22MF X5R (0603)	10%	16V
U	C1025		CERAMIC CHIP 0.1MF X5R 0603	10%	6.3V
U	C1026		CERAMIC CHIP 0.1MF X5R 0603	10%	6.3V
U	C1027		CERAMIC CHIP 0.1MF X5R 0603	10%	6.3V
U	C1028		CERAMIC CHIP 0.1MF X5R 0603	10%	6.3V
U	C1029		CERAMIC CHIP 0.1MF X5R 0603	10%	6.3V
U	C1030		CERAMIC CHIP 0.1MF X5R 0603	10%	6.3V
U	C1031		CERAMIC CHIP 0.1MF X5R 0603	10%	6.3V
U	C1032		CERAMIC CHIP 0.1MF X5R 0603	10%	6.3V
U	C1033		CERAMIC CHIP 0.1MF X5R 0603	10%	6.3V
U	C1034		CERAMIC CHIP 0.1MF X5R 0603	10%	6.3V
U	C1035		CERAMIC CHIP 120PF C0G 0603	5%	50V
U	C1036		CERAMIC CHIP 120PF C0G 0603	5%	50V
U	C1037		CERAMIC CHIP 120PF C0G 0603	5%	50V
U	C1038		CERAMIC CHIP 120PF C0G 0603	5%	50V
U	C1039		CERAMIC CHIP 120PF C0G 0603	5%	50V
U	C1040		CERAMIC CHIP 120PF C0G 0603	5%	50V
U	C1041		CERAMIC CHIP 120PF C0G 0603	5%	50V
U	C1042		CERAMIC CHIP 120PF C0G 0603	5%	50V
U	C1101		CERAMIC CHIP (22MF)	20%	6.3V
U	C1102		CERAMIC CHIP (22MF)	20%	6.3V
U	C1103		CERAMIC CHIP (22MF)	20%	6.3V
U	C1104		CERAMIC CHIP (22MF)	20%	6.3V
U	C1105		CERAMIC CHIP (22MF)	20%	6.3V
U	C1106		CERAMIC CHIP (22MF)	20%	6.3V
U	C1107		CERAMIC CHIP (22MF)	20%	6.3V
U	C1110		CERAMIC CHIP (22MF)	20%	6.3V
U	C1111		CERAMIC CHIP 4.7UFX5R(1106)	20%	6.3V
U	C1113		CERAMIC CHIP 1UF X5R (0603)	20%	6.3V
U	C1114		CERAMIC CHIP 1UF X5R (0603)	20%	6.3V
U	C1118		CERAMIC CHIP (22MF)	20%	6.3V
U	C1119		CERAMIC CHIP (22MF)	20%	6.3V
U	C1120		CERAMIC CHIP (22MF)	20%	6.3V
U	C1121		CERAMIC CHIP (22MF)	20%	6.3V
U	C1122		CERAMIC CHIP (22MF)	20%	6.3V
U	C1123		CERAMIC CHIP (22MF)	20%	6.3V
U	C1124		CERAMIC CHIP (22MF)	20%	6.3V
U	C1125		CERAMIC CHIP 1UF X5R (0603)	20%	6.3V
U	C1126		CERAMIC CHIP 1UF X5R (0603)	20%	6.3V
U	C1127		CERAMIC CHIP (22MF)	20%	6.3V
U	C1128		CERAMIC CHIP 4.7UFX5R(1106)	20%	6.3V
U	C1130		CERAMIC CHIP 1UF X5R (0603)	20%	6.3V
U	C1131		CERAMIC CHIP 1UF X5R (0603)	20%	6.3V
U	C1132		CERAMIC CHIP 1UF X5R (0603)	20%	6.3V
U	C1133		CERAMIC CHIP 1UF X5R (0603)	20%	6.3V
U	C1134		CERAMIC CHIP 1UF X5R (0603)	20%	6.3V
U	C1135		CERAMIC CHIP (22MF)	20%	6.3V
U	C1136		CERAMIC CHIP (22MF)	20%	6.3V
U	C1137		CERAMIC CHIP (22MF)	20%	6.3V
U	C1138		CERAMIC CHIP (22MF)	20%	6.3V
U	C1139		CERAMIC CHIP (22MF)	20%	6.3V
U	C1140		CERAMIC CHIP (22MF)	20%	6.3V
U	C1141		CERAMIC CHIP (22MF)	20%	6.3V
U	C1142		CERAMIC CHIP 1UF X5R (0603)	20%	6.3V
U	C1143		CERAMIC CHIP 1UF X5R (0603)	20%	6.3V
U	C1144		CERAMIC CHIP (22MF)	20%	6.3V
U	C1145		CERAMIC CHIP 4.7UFX5R(1106)	20%	6.3V
U	C1147		CERAMIC CHIP 1UF X5R (0603)	20%	6.3V
U	C1148		CERAMIC CHIP 1UF X5R (0603)	20%	6.3V
U	C1149		CERAMIC CHIP 1UF X5R (0603)	20%	6.3V
U	C1150		CERAMIC CHIP 1UF X5R (0603)	20%	6.3V
U	C1151		CERAMIC CHIP 1UF X5R (0603)	20%	6.3V
U	C1152		CERAMIC CHIP (22MF)	20%	6.3V
U	C1153		CERAMIC CHIP (22MF)	20%	6.3V
U	C1154		CERAMIC CHIP (22MF)	20%	6.3V
U	C1155		CERAMIC CHIP (22MF)	20%	6.3V
U	C1156		CERAMIC CHIP (22MF)	20%	6.3V
U	C1157		CERAMIC CHIP (22MF)	20%	6.3V
U	C1158		CERAMIC CHIP (22MF)	20%	6.3V
U	C1160		CERAMIC CHIP (22MF)	20%	6.3V
U	C1161		CERAMIC CHIP 4.7UFX5R(1106)	20%	6.3V
U	C1163		CERAMIC CHIP 1UF X5R (0603)	20%	6.3V
U	C1165		CERAMIC CHIP (22MF)	20%	6.3V
U	C1166		CERAMIC CHIP (22MF)	20%	6.3V
U	C1167		CERAMIC CHIP (22MF)	20%	6.3V
U	C1168		CERAMIC CHIP (22MF)	20%	6.3V
U	C1169		CERAMIC CHIP (22MF)	20%	6.3V
U	C1170		CERAMIC CHIP (22MF)	20%	6.3V
U	C1171		CERAMIC CHIP (22MF)	20%	6.3V
U	C1172		CERAMIC CHIP (22MF)	20%	6.3V
U	C1173		CERAMIC CHIP 4.7UFX5R(1106)	20%	6.3V
U	C1174		CERAMIC CHIP 1UF X5R (0603)	20%	6.3V
U	C1176		CERAMIC CHIP (22MF)	20%	6.3V
U	C1177		CERAMIC CHIP (22MF)	20%	6.3V
U	C1178		CERAMIC CHIP (22MF)	20%	6.3V
U	C1179		CERAMIC CHIP (22MF)	20%	6.3V
U	C1180		CERAMIC CHIP (22MF)	20%	6.3V
U	C1181		CERAMIC CHIP (22MF)	20%	6.3V
U	C1182		CERAMIC CHIP (22MF)	20%	6.3V
U	C1183		CERAMIC CHIP 4.7UFX5R(1106)	20%	6.3V
U	C1184		CERAMIC CHIP 1UF X5R (0603)	20%	6.3V
U	C1186		CERAMIC CHIP (22MF)	20%	6.3V
U	C1187		CERAMIC CHIP (22MF)	20%	6.3V
U	C1188		CERAMIC CHIP (22MF)	20%	6.3V
U	C1189		CERAMIC CHIP (22MF)	20%	6.3V
U	C1190		CERAMIC CHIP (22MF)	20%	6.3V
U	C1193		CERAMIC CHIP 4.7UFX5R(1106)	20%	6.3V
U	C1194		CERAMIC CHIP 1UF X5R (0603)	20%	6.3V
U	C1196		CERAMIC CHIP (22MF)	20%	6.3V
U	C1197		CERAMIC CHIP (22MF)	20%	6.3V
U	C1198		CERAMIC CHIP (22MF)	20%	6.3V
U	C1199		CERAMIC CHIP (22MF)	20%	6.3V
U	C1200		CERAMIC CHIP (22MF)	20%	6.3V
U	C1202		CERAMIC CHIP 4.7UFX5R(1106)	20%	6.3V
U	C1203		CERAMIC CHIP 1UF X5R (0603)	20%	6.3V
U	C1205		CERAMIC CHIP (22MF)	20%	6.3V
U	C1206		CERAMIC CHIP (22MF)	20%	6.3V
U	C1207		CERAMIC CHIP (22MF)	20%	6.3V
U	C1208		CERAMIC CHIP (22MF)	20%	6.3V
U	C1209		CERAMIC CHIP (22MF)	20%	6.3V
U	C1212		CERAMIC CHIP 1UF X5R (0603)	20%	6.3V
U	C1213		CERAMIC CHIP (22MF)	20%	6.3V
U	C1214		CERAMIC CHIP (22MF)	20%	6.3V
U	C1215		CERAMIC CHIP (22MF)	20%	6.3V
U	C1218		CERAMIC CHIP (22MF)	20%	6.3V
U	C1223		CERAMIC CHIP 1UF X5R (0603)	20%	6.3V
U	C1224		CERAMIC CHIP 1UF X5R (0603)	20%	6.3V
U	C1225		CERAMIC CHIP 1UF X5R (0603)	20%	6.3V
U	C1226		CERAMIC CHIP 1UF X5R (0603)	20%	6.3V
U	C1227		CERAMIC CHIP 1UF X5R (0603)	20%	6.3V
U	C1228		CERAMIC CHIP 1UF X5R (0603)	20%	6.3V
U	C1229		CERAMIC CHIP 1UF X5R (0603)	20%	6.3V
U	C1230		CERAMIC CHIP 1UF X5R (0603)	20%	6.3V
U	C1231		CERAMIC CHIP 1UF X5R (0603)	20%	6.3V
U	C1232		CERAMIC CHIP 1UF X5R (0603)	20%	6.3V
U	C1233		CERAMIC CHIP 1UF X5R (0603)	20%	6.3V
U	C1234		CERAMIC CHIP 1UF X5R (0603)	20%	6.3V
U	C1235		CERAMIC CHIP 1UF X5R (0603)	20%	6.3V
U	C1236		CERAMIC CHIP 1UF X5R (0603)	20%	6.3V
U	C1237		CERAMIC CHIP 1UF X5R (0603)	20%	6.3V

Reproduction Prohibited

SC	Ref. No.	Part No.	Description	Remark		SC	Ref. No.	Part No.	Description	Remark		SC	Ref. No.	Part No.	Description	Remark		SC	Ref. No.	Part No.	Description	Remark	
U	C1238		CERAMIC CHIP 1UF X5R (0603)	20%	6.3V	U	C2022		CERAMIC CHIP 1UF X5R (0603)	20%	6.3V	U	C2106		CERAMIC CHIP 1UF X5R (0603)	20%	6.3V	U	C2153		CERAMIC CHIP 1UF X5R (0603)	20%	6.3V
U	C1239		CERAMIC CHIP 1UF X5R (0603)	20%	6.3V	U	C2023		CERAMIC CHIP 1UF X5R (0603)	20%	6.3V	U	C2107		CERAMIC CHIP 4.7UFX5R(1106)	20%	6.3V	U	C2154		CERAMIC CHIP 1UF X5R (0603)	20%	6.3V
U	C1240		CERAMIC CHIP 1UF X5R (0603)	20%	6.3V	U	C2024		CERAMIC CHIP 1UF X5R (0603)	20%	6.3V	U	C2108		CERAMIC CHIP 1UF X5R (0603)	20%	6.3V	U	C2155		CERAMIC CHIP 4.7UFX5R(1106)	20%	6.3V
U	C1241		CERAMIC CHIP 1UF X5R (0603)	20%	6.3V	U	C2025		CERAMIC CHIP 4.7UFX5R(1106)	20%	6.3V	U	C2109		CERAMIC CHIP 1UF X5R (0603)	20%	6.3V	U	C2156		CERAMIC CHIP 1UF X5R (0603)	20%	6.3V
U	C1242		CERAMIC CHIP 1UF X5R (0603)	20%	6.3V	U	C2026		CERAMIC CHIP 1UF X5R (0603)	20%	6.3V	U	C2110		CERAMIC CHIP 1UF X5R (0603)	20%	6.3V	U	C2157		CERAMIC CHIP 1UF X5R (0603)	20%	6.3V
U	C1243		CERAMIC CHIP 1UF X5R (0603)	20%	6.3V	U	C2027		CERAMIC CHIP 1UF X5R (0603)	20%	6.3V	U	C2112		CERAMIC CHIP 4.7UFX5R(1106)	20%	6.3V	U	C2158		CERAMIC CHIP 1UF X5R (0603)	20%	6.3V
U	C1244		CERAMIC CHIP 1UF X5R (0603)	20%	6.3V	U	C2028		CERAMIC CHIP 1UF X5R (0603)	20%	6.3V	U	C2113		CERAMIC CHIP 1UF X5R (0603)	20%	6.3V	U	C2159		CERAMIC CHIP 1UF X5R (0603)	20%	6.3V
U	C1245		CERAMIC CHIP (22MF)	20%	6.3V	U	C2029		CERAMIC CHIP 1UF X5R (0603)	20%	6.3V	U	C2114		CERAMIC CHIP 1UF X5R (0603)	20%	6.3V	U	C2160		CERAMIC CHIP 1UF X5R (0603)	20%	6.3V
U	C1246		CERAMIC CHIP (22MF)	20%	6.3V	U	C2030		CERAMIC CHIP 1UF X5R (0603)	20%	6.3V	U	C2115		CERAMIC CHIP 1UF X5R (0603)	20%	6.3V	U	C2161		CERAMIC CHIP 1UF X5R (0603)	20%	6.3V
U	C1247		CERAMIC CHIP (22MF)	20%	6.3V	U	C2031		CERAMIC CHIP 1UF X5R (0603)	20%	6.3V	U	C2116		CERAMIC CHIP 1UF X5R (0603)	20%	6.3V	U	C2162		CERAMIC CHIP 1UF X5R (0603)	20%	6.3V
U	C1248		CERAMIC CHIP (22MF)	20%	6.3V	U	C2032		CERAMIC CHIP 1UF X5R (0603)	20%	6.3V	U	C2117		CERAMIC CHIP 4.7UFX5R(1106)	20%	6.3V	U	C2163		CERAMIC CHIP 1UF X5R (0603)	20%	6.3V
U	C1255		CERAMIC CHIP (22MF)	20%	6.3V	U	C2033		CERAMIC CHIP 1UF X5R (0603)	20%	6.3V	U	C2118		CERAMIC CHIP 1UF X5R (0603)	20%	6.3V	U	C2164		CERAMIC CHIP 1UF X5R (0603)	20%	6.3V
U	C1256		CERAMIC CHIP (22MF)	20%	6.3V	U	C2034		CERAMIC CHIP 1UF X5R (0603)	20%	6.3V	U	C2119		CERAMIC CHIP 1UF X5R (0603)	20%	6.3V	U	C2201		CERAMIC CHIP 4.7UFX5R(1106)	20%	6.3V
U	C1257		CERAMIC CHIP (22MF)	20%	6.3V	U	C2035		CERAMIC CHIP 1UF X5R (0603)	20%	6.3V	U	C2120		CERAMIC CHIP 1UF X5R (0603)	20%	6.3V	U	C2202		CERAMIC CHIP 1UF X5R (0603)	20%	6.3V
U	C1258		CERAMIC CHIP (22MF)	20%	6.3V	U	C2036		CERAMIC CHIP 1UF X5R (0603)	20%	6.3V	U	C2121		CERAMIC CHIP 1UF X5R (0603)	20%	6.3V	U	C2203		CERAMIC CHIP 1UF X5R (0603)	20%	6.3V
U	C1259		CERAMIC CHIP (22MF)	20%	6.3V	U	C2037		CERAMIC CHIP 1UF X5R (0603)	20%	6.3V	U	C2122		CERAMIC CHIP 1UF X5R (0603)	20%	6.3V	U	C2204		CERAMIC CHIP 1UF X5R (0603)	20%	6.3V
U	C1260		CERAMIC CHIP 4.7UFX5R(1106)	20%	6.3V	U	C2038		CERAMIC CHIP 4.7UFX5R(1106)	20%	6.3V	U	C2123		CERAMIC CHIP 4.7UFX5R(1106)	20%	6.3V	U	C2205		CERAMIC CHIP 1UF X5R (0603)	20%	6.3V
U	C1261		CERAMIC CHIP 4.7UFX5R(1106)	20%	6.3V	U	C2039		CERAMIC CHIP 1UF X5R (0603)	20%	6.3V	U	C2124		CERAMIC CHIP 1UF X5R (0603)	20%	6.3V	U	C2206		CERAMIC CHIP 1UF X5R (0603)	20%	6.3V
U	C1264		CERAMIC CHIP (22MF)	20%	6.3V	U	C2040		CERAMIC CHIP 1UF X5R (0603)	20%	6.3V	U	C2125		CERAMIC CHIP 1UF X5R (0603)	20%	6.3V	U	C2207		CERAMIC CHIP 1UF X5R (0603)	20%	6.3V
U	C1265		CERAMIC CHIP (22MF)	20%	6.3V	U	C2041		CERAMIC CHIP 1UF X5R (0603)	20%	6.3V	U	C2126		CERAMIC CHIP 1UF X5R (0603)	20%	6.3V	U	C2208		CERAMIC CHIP 4.7UFX5R(1106)	20%	6.3V
U	C1266		CERAMIC CHIP 4.7UFX5R(1106)	20%	6.3V	U	C2042		CERAMIC CHIP 1UF X5R (0603)	20%	6.3V	U	C2127		CERAMIC CHIP 1UF X5R (0603)	20%	6.3V	U	C2209		CERAMIC CHIP 1UF X5R (0603)	20%	6.3V
U	C1267		CERAMIC CHIP 4.7UFX5R(1106)	20%	6.3V	U	C2043		CERAMIC CHIP 1UF X5R (0603)	20%	6.3V	U	C2128		CERAMIC CHIP 1UF X5R (0603)	20%	6.3V	U	C2210		CERAMIC CHIP 1UF X5R (0603)	20%	6.3V
U	C1268		CERAMIC CHIP 4.7UFX5R(1106)	20%	6.3V	U	C2044		CERAMIC CHIP 4.7UFX5R(1106)	20%	6.3V	U	C2129		CERAMIC CHIP 1UF X5R (0603)	20%	6.3V	U	C2211		CERAMIC CHIP 1UF X5R (0603)	20%	6.3V
U	C1269		CERAMIC CHIP 4.7UFX5R(1106)	20%	6.3V	U	C2045		CERAMIC CHIP 1UF X5R (0603)	20%	6.3V	U	C2130		CERAMIC CHIP 1UF X5R (0603)	20%	6.3V	U	C2212		CERAMIC CHIP 1UF X5R (0603)	20%	6.3V
U	C1270		CERAMIC CHIP 4.7UFX5R(1106)	20%	6.3V	U	C2046		CERAMIC CHIP 1UF X5R (0603)	20%	6.3V	U	C2131		CERAMIC CHIP 4.7UFX5R(1106)	20%	6.3V	U	C2213		CERAMIC CHIP 4.7UFX5R(1106)	20%	6.3V
U	C2001		CERAMIC CHIP 4.7UFX5R(1106)	20%	6.3V	U	C2047		CERAMIC CHIP 1UF X5R (0603)	20%	6.3V	U	C2132		CERAMIC CHIP 1UF X5R (0603)	20%	6.3V	U	C2214		CERAMIC CHIP 1UF X5R (0603)	20%	6.3V
U	C2002		CERAMIC CHIP 1UF X5R (0603)	20%	6.3V	U	C2048		CERAMIC CHIP 1UF X5R (0603)	20%	6.3V	U	C2133		CERAMIC CHIP 1UF X5R (0603)	20%	6.3V	U	C2215		CERAMIC CHIP 1UF X5R (0603)	20%	6.3V
U	C2003		CERAMIC CHIP 1UF X5R (0603)	20%	6.3V	U	C2049		CERAMIC CHIP 4.7UFX5R(1106)	20%	6.3V	U	C2134		CERAMIC CHIP 1UF X5R (0603)	20%	6.3V	U	C2216		CERAMIC CHIP 1UF X5R (0603)	20%	6.3V
U	C2004		CERAMIC CHIP 1UF X5R (0603)	20%	6.3V	U	C2050		CERAMIC CHIP 1UF X5R (0603)	20%	6.3V	U	C2135		CERAMIC CHIP 1UF X5R (0603)	20%	6.3V	U	C2217		CERAMIC CHIP 1UF X5R (0603)	20%	6.3V
U	C2005		CERAMIC CHIP 1UF X5R (0603)	20%	6.3V	U	C2051		CERAMIC CHIP 1UF X5R (0603)	20%	6.3V	U	C2136		CERAMIC CHIP 1UF X5R (0603)	20%	6.3V	U	C2218		CERAMIC CHIP 4.7UFX5R(1106)	20%	6.3V
U	C2006		CERAMIC CHIP 1UF X5R (0603)	20%	6.3V	U	C2052		CERAMIC CHIP 1UF X5R (0603)	20%	6.3V	U	C2137		CERAMIC CHIP 1UF X5R (0603)	20%	6.3V	U	C2219		CERAMIC CHIP 1UF X5R (0603)	20%	6.3V
U	C2007		CERAMIC CHIP 1UF X5R (0603)	20%	6.3V	U	C2053		CERAMIC CHIP 1UF X5R (0603)	20%	6.3V	U	C2138		CERAMIC CHIP 4.7UFX5R(1106)	20%	6.3V	U	C2220		CERAMIC CHIP 1UF X5R (0603)	20%	6.3V
U	C2008		CERAMIC CHIP 4.7UFX5R(1106)	20%	6.3V	U	C2054		CERAMIC CHIP 1UF X5R (0603)	20%	6.3V	U	C2139		CERAMIC CHIP 1UF X5R (0603)	20%	6.3V	U	C2221		CERAMIC CHIP 1UF X5R (0603)	20%	6.3V
U	C2010		CERAMIC CHIP 1UF X5R (0603)	20%	6.3V	U	C2055		CERAMIC CHIP 4.7UFX5R(1106)	20%	6.3V	U	C2140		CERAMIC CHIP 1UF X5R (0603)	20%	6.3V	U	C2222		CERAMIC CHIP 1UF X5R (0603)	20%	6.3V
U	C2011		CERAMIC CHIP 1UF X5R (0603)	20%	6.3V	U	C2056		CERAMIC CHIP 1UF X5R (0603)	20%	6.3V	U	C2141		CERAMIC CHIP 1UF X5R (0603)	20%	6.3V	U	C2223		CERAMIC CHIP 1UF X5R (0603)	20%	6.3V
U	C2012		CERAMIC CHIP 1UF X5R (0603)	20%	6.3V	U	C2057		CERAMIC CHIP 1UF X5R (0603)	20%	6.3V	U	C2143		CERAMIC CHIP 4.7UFX5R(1106)	20%	6.3V	U	C2224		CERAMIC CHIP 1UF X5R (0603)	20%	6.3V
U	C2013		CERAMIC CHIP 4.7UFX5R(1106)	20%	6.3V	U	C2058		CERAMIC CHIP 1UF X5R (0603)	20%	6.3V	U	C2144		CERAMIC CHIP 1UF X5R (0603)	20%	6.3V	U	C2225		CERAMIC CHIP 4.7UFX5R(1106)	20%	6.3V
U	C2014		CERAMIC CHIP 1UF X5R (0603)	20%	6.3V	U	C2059		CERAMIC CHIP 1UF X5R (0603)	20%	6.3V	U	C2145		CERAMIC CHIP 1UF X5R (0603)	20%	6.3V	U	C2226		CERAMIC CHIP 1UF X5R (0603)	20%	6.3V
U	C2015		CERAMIC CHIP 1UF X5R (0603)	20%	6.3V	U	C2060		CERAMIC CHIP 1UF X5R (0603)	20%	6.3V	U	C2146		CERAMIC CHIP 1UF X5R (0603)	20%	6.3V	U	C2227		CERAMIC CHIP 1UF X5R (0603)	20%	6.3V
U	C2016		CERAMIC CHIP 1UF X5R (0603)	20%	6.3V	U	C2062		CERAMIC CHIP 1UF X5R (0603)	20%	6.3V	U	C2147		CERAMIC CHIP 1UF X5R (0603)	20%	6.3V	U	C2228		CERAMIC CHIP 1UF X5R (0603)	20%	6.3V
U	C2017		CERAMIC CHIP 1UF X5R (0603)	20%	6.3V	U	C2101		CERAMIC CHIP 1UF X5R (0603)	20%	6.3V	U	C2148		CERAMIC CHIP 4.7UFX5R(1106)	20%	6.3V	U	C2229		CERAMIC CHIP 1UF X5R (0603)	20%	6.3V
U	C2018		CERAMIC CHIP 4.7UFX5R(1106)	20%	6.3V	U	C2102		CERAMIC CHIP 1UF X5R (0603)	20%	6.3V	U	C2149		CERAMIC CHIP 1UF X5R (0603)	20%	6.3V	U	C2230		CERAMIC CHIP 1UF X5R (0603)	20%	6.3V
U	C2019		CERAMIC CHIP 1UF X5R (0603)	20%	6.3V	U	C2103		CERAMIC CHIP 1UF X5R (0603)	20%	6.3V	U	C2150		CERAMIC CHIP 1UF X5R (0603)	20%	6.3V	U	C2232		CERAMIC CHIP 1UF X5R (0603)	20%	6.3V
U	C2020		CERAMIC CHIP 1UF X5R (0603)	20%	6.3V	U	C2104		CERAMIC CHIP 1UF X5R (0603)	20%	6.3V	U	C2151		CERAMIC CHIP 1UF X5R (0603)	20%	6.3V	U	C2233		CERAMIC CHIP 1UF X5R (0603)	20%	6.3V
U	C2021		CERAMIC CHIP 1UF X5R (0603)	20%	6.3V	U	C2105		CERAMIC CHIP 1UF X5R (0603)	20%	6.3V	U	C2152		CERAMIC CHIP 1UF X5R (0603)	20%	6.3V	U	C2234		CERAMIC CHIP 1UF X5R (0603)	20%	6.3V

Reproduction Prohibited

SC	Ref. No.	Part No.	Description	Remark	
U	C2235		CERAMIC CHIP 1UF X5R (0603)	20%	6.3V
U	C2236		CERAMIC CHIP 1UF X5R (0603)	20%	6.3V
U	C2237		CERAMIC CHIP 1UF X5R (0603)	20%	6.3V
U	C2238		CERAMIC CHIP 1UF X5R (0603)	20%	6.3V
U	C2239		CERAMIC CHIP 4.7UFX5R(1106)	20%	6.3V
U	C2240		CERAMIC CHIP 1UF X5R (0603)	20%	6.3V
U	C2241		CERAMIC CHIP 1UF X5R (0603)	20%	6.3V
U	C2242		CERAMIC CHIP 1UF X5R (0603)	20%	6.3V
U	C2243		CERAMIC CHIP 1UF X5R (0603)	20%	6.3V
U	C2244		CERAMIC CHIP 4.7UFX5R(1106)	20%	6.3V
U	C2245		CERAMIC CHIP 1UF X5R (0603)	20%	6.3V
U	C2246		CERAMIC CHIP 1UF X5R (0603)	20%	6.3V
U	C2247		CERAMIC CHIP 1UF X5R (0603)	20%	6.3V
U	C2248		CERAMIC CHIP 1UF X5R (0603)	20%	6.3V
U	C2249		CERAMIC CHIP 4.7UFX5R(1106)	20%	6.3V
U	C2250		CERAMIC CHIP 1UF X5R (0603)	20%	6.3V
U	C2251		CERAMIC CHIP 1UF X5R (0603)	20%	6.3V
U	C2252		CERAMIC CHIP 1UF X5R (0603)	20%	6.3V
U	C2253		CERAMIC CHIP 1UF X5R (0603)	20%	6.3V
U	C2254		CERAMIC CHIP 1UF X5R (0603)	20%	6.3V
U	C2255		CERAMIC CHIP 4.7UFX5R(1106)	20%	6.3V
U	C2256		CERAMIC CHIP 1UF X5R (0603)	20%	6.3V
U	C2257		CERAMIC CHIP 1UF X5R (0603)	20%	6.3V
U	C2258		CERAMIC CHIP 1UF X5R (0603)	20%	6.3V
U	C2259		CERAMIC CHIP 1UF X5R (0603)	20%	6.3V
U	C2260		CERAMIC CHIP 1UF X5R (0603)	20%	6.3V
U	C2262		CERAMIC CHIP 1UF X5R (0603)	20%	6.3V
U	C2263		CERAMIC CHIP 1UF X5R (0603)	20%	6.3V
U	C2264		CERAMIC CHIP 1UF X5R (0603)	20%	6.3V
U	C2301		CERAMIC CHIP 1UF X5R (0603)	20%	6.3V
U	C2302		CERAMIC CHIP 1UF X5R (0603)	20%	6.3V
U	C2303		CERAMIC CHIP 1UF X5R (0603)	20%	6.3V
U	C2304		CERAMIC CHIP 1UF X5R (0603)	20%	6.3V
U	C2305		CERAMIC CHIP 1UF X5R (0603)	20%	6.3V
U	C2306		CERAMIC CHIP 1UF X5R (0603)	20%	6.3V
U	C2307		CERAMIC CHIP 4.7UFX5R(1106)	20%	6.3V
U	C2308		CERAMIC CHIP 1UF X5R (0603)	20%	6.3V
U	C2309		CERAMIC CHIP 1UF X5R (0603)	20%	6.3V
U	C2310		CERAMIC CHIP 1UF X5R (0603)	20%	6.3V
U	C2311		CERAMIC CHIP 1UF X5R (0603)	20%	6.3V
U	C2312		CERAMIC CHIP 4.7UFX5R(1106)	20%	6.3V
U	C2313		CERAMIC CHIP 1UF X5R (0603)	20%	6.3V
U	C2314		CERAMIC CHIP 1UF X5R (0603)	20%	6.3V
U	C2315		CERAMIC CHIP 1UF X5R (0603)	20%	6.3V
U	C2316		CERAMIC CHIP 1UF X5R (0603)	20%	6.3V

SC	Ref. No.	Part No.	Description	Remark	
U	C2317		CERAMIC CHIP 4.7UFX5R(1106)	20%	6.3V
U	C2318		CERAMIC CHIP 1UF X5R (0603)	20%	6.3V
U	C2319		CERAMIC CHIP 1UF X5R (0603)	20%	6.3V
U	C2320		CERAMIC CHIP 1UF X5R (0603)	20%	6.3V
U	C2321		CERAMIC CHIP 1UF X5R (0603)	20%	6.3V
U	C2322		CERAMIC CHIP 1UF X5R (0603)	20%	6.3V
U	C2323		CERAMIC CHIP 4.7UFX5R(1106)	20%	6.3V
U	C2324		CERAMIC CHIP 1UF X5R (0603)	20%	6.3V
U	C2325		CERAMIC CHIP 1UF X5R (0603)	20%	6.3V
U	C2326		CERAMIC CHIP 1UF X5R (0603)	20%	6.3V
U	C2327		CERAMIC CHIP 1UF X5R (0603)	20%	6.3V
U	C2328		CERAMIC CHIP 1UF X5R (0603)	20%	6.3V
U	C2330		CERAMIC CHIP 1UF X5R (0603)	20%	6.3V
U	C2331		CERAMIC CHIP 4.7UFX5R(1106)	20%	6.3V
U	C2332		CERAMIC CHIP 1UF X5R (0603)	20%	6.3V
U	C2333		CERAMIC CHIP 1UF X5R (0603)	20%	6.3V
U	C2334		CERAMIC CHIP 1UF X5R (0603)	20%	6.3V
U	C2335		CERAMIC CHIP 1UF X5R (0603)	20%	6.3V
U	C2336		CERAMIC CHIP 1UF X5R (0603)	20%	6.3V
U	C2337		CERAMIC CHIP 1UF X5R (0603)	20%	6.3V
U	C2338		CERAMIC CHIP 4.7UFX5R(1106)	20%	6.3V
U	C2339		CERAMIC CHIP 1UF X5R (0603)	20%	6.3V
U	C2340		CERAMIC CHIP 1UF X5R (0603)	20%	6.3V
U	C2341		CERAMIC CHIP 1UF X5R (0603)	20%	6.3V
U	C2342		CERAMIC CHIP 1UF X5R (0603)	20%	6.3V
U	C2343		CERAMIC CHIP 4.7UFX5R(1106)	20%	6.3V
U	C2344		CERAMIC CHIP 1UF X5R (0603)	20%	6.3V
U	C2345		CERAMIC CHIP 1UF X5R (0603)	20%	6.3V
U	C2346		CERAMIC CHIP 1UF X5R (0603)	20%	6.3V
U	C2347		CERAMIC CHIP 1UF X5R (0603)	20%	6.3V
U	C2348		CERAMIC CHIP 4.7UFX5R(1106)	20%	6.3V
U	C2349		CERAMIC CHIP 1UF X5R (0603)	20%	6.3V
U	C2350		CERAMIC CHIP 1UF X5R (0603)	20%	6.3V
U	C2351		CERAMIC CHIP 1UF X5R (0603)	20%	6.3V
U	C2352		CERAMIC CHIP 1UF X5R (0603)	20%	6.3V
U	C2353		CERAMIC CHIP 1UF X5R (0603)	20%	6.3V
U	C2354		CERAMIC CHIP 1UF X5R (0603)	20%	6.3V
U	C2355		CERAMIC CHIP 4.7UFX5R(1106)	20%	6.3V
U	C2356		CERAMIC CHIP 1UF X5R (0603)	20%	6.3V
U	C2357		CERAMIC CHIP 1UF X5R (0603)	20%	6.3V
U	C2358		CERAMIC CHIP 1UF X5R (0603)	20%	6.3V
U	C2359		CERAMIC CHIP 1UF X5R (0603)	20%	6.3V
U	C2360		CERAMIC CHIP 1UF X5R (0603)	20%	6.3V
U	C2361		CERAMIC CHIP 1UF X5R (0603)	20%	6.3V
U	C2362		CERAMIC CHIP 1UF X5R (0603)	20%	6.3V

SC	Ref. No.	Part No.	Description	Remark	
U	C2363		CERAMIC CHIP 1UF X5R (0603)	20%	6.3V
U	C2465		CERAMIC CHIP 1UF X5R (0603)	20%	6.3V
U	C2466		CERAMIC CHIP 1UF X5R (0603)	20%	6.3V
U	C3001		CERAMIC CHIP (22MF)	20%	6.3V
U	C3002		CERAMIC CHIP (22MF)	20%	6.3V
U	C3005		CERAMIC CHIP 4.7UFX5R(1106)	20%	6.3V
U	C3006		CERAMIC CHIP 4.7UFX5R(1106)	20%	6.3V
U	C3007		CERAMIC CHIP 0.1MF X5R 0603	10%	6.3V
U	C3008		CERAMIC CHIP 0.1MF X5R 0603	10%	6.3V
U	C3009		CERAMIC CHIP 0.1MF X5R 0603	10%	6.3V
U	C3010		CERAMIC CHIP 0.1MF X5R 0603	10%	6.3V
U	C3011		CERAMIC CHIP 0.1MF X5R 0603	10%	6.3V
U	C3012		CERAMIC CHIP 4.7UFX5R(1106)	20%	6.3V
U	C3013		CERAMIC CHIP 0.1MF X5R 0603	10%	6.3V
U	C3015		CERAMIC CHIP 0.1MF X5R 0603	10%	6.3V
U	C3016		CERAMIC CHIP 4.7UFX5R(1106)	20%	6.3V
U	C3017		CERAMIC CHIP 0.1MF X5R 0603	10%	6.3V
U	C3018		CERAMIC CHIP 0.1MF X5R 0603	10%	6.3V
U	C3019		CERAMIC CHIP 0.1MF X5R 0603	10%	6.3V
U	C3020		CERAMIC CHIP 0.1MF X5R 0603	10%	6.3V
U	C3021		CERAMIC CHIP 0.1MF X5R 0603	10%	6.3V
U	C3022		CERAMIC CHIP 4.7UFX5R(1106)	20%	6.3V
U	C3023		CERAMIC CHIP 0.1MF X5R 0603	10%	6.3V
U	C3024		CERAMIC CHIP 0.1MF X5R 0603	10%	6.3V
U	C3025		CERAMIC CHIP 4.7UFX5R(1106)	20%	6.3V
U	C3026		CERAMIC CHIP 0.1MF X5R 0603	10%	6.3V
U	C3027		CERAMIC CHIP 0.1MF X5R 0603	10%	6.3V
U	C3028		CERAMIC CHIP 4.7UFX5R(1106)	20%	6.3V
U	C3029		CERAMIC CHIP 4.7UFX5R(1106)	20%	6.3V
U	C3030		CERAMIC CHIP 0.1MF X5R 0603	10%	6.3V
U	C3031		CERAMIC CHIP 0.1MF X5R 0603	10%	6.3V
U	C3032		CERAMIC CHIP 0.1MF X5R 0603	10%	6.3V
U	C3033		CERAMIC CHIP 0.1MF X5R 0603	10%	6.3V
U	C3034		CERAMIC CHIP 0.1MF X5R (0603)	10%	16V
U	C3064		CERAMIC CHIP 100PF C0G 0603	5%	50V
U	C3065		CERAMIC CHIP 100PF C0G 0603	5%	50V
U	C3501		CERAMIC CHIP 0.1MF X5R (0603)	10%	16V
U	C3502		CERAMIC CHIP 0.1MF X5R (0603)	10%	16V
U	C3503		CERAMIC CHIP 0.22MF X5R 0603	20%	6.3V
U	C3504		CERAMIC CHIP 0.22MF X5R 0603	20%	6.3V
U	C3505		CERAMIC CHIP 0.22MF X5R 0603	20%	6.3V
U	C3506		CERAMIC CHIP 0.22MF X5R 0603	20%	6.3V
U	C3507		CERAMIC CHIP 0.22MF X5R 0603	20%	6.3V
U	C3508		CERAMIC CHIP 0.22MF X5R 0603	20%	6.3V
U	C3509		CERAMIC CHIP 0.22MF X5R 0603	20%	6.3V

SC	Ref. No.	Part No.	Description	Remark	
U	C3510		CERAMIC CHIP 0.22MF X5R 0603	20%	6.3V
U	C3511		CERAMIC CHIP 0.1MF X5R 0603	10%	6.3V
U	C3512		CERAMIC CHIP 10UF X5R (1106)	20%	6.3V
U	C3513		CERAMIC CHIP 2.2MF X5R 1005	20%	6.3V
U	C3514		CERAMIC CHIP 0.1MF X5R 0603	10%	6.3V
U	C3515		CERAMIC CHIP 0.1MF X5R 0603	10%	6.3V
U	C3516		CERAMIC CHIP 0.1MF X5R 0603	10%	6.3V
U	C3517		CERAMIC CHIP 0.1MF X5R 0603	10%	6.3V
U	C3521		CERAMIC CHIP 10MF X6S 1608	20%	16V
U	C3523		CERAMIC CHIP 0.1MF X5R (0603)	10%	16V
U	C3524		CERAMIC CHIP 0.33MF X5R (0603)	10%	6.3V
U	C3525		CERAMIC CHIP 0.33MF X5R (0603)	10%	6.3V
U	C3526		CERAMIC CHIP 0.22MF X5R 0603	20%	6.3V
U	C3527		CERAMIC CHIP 0.22MF X5R 0603	20%	6.3V
U	C3528		CERAMIC CHIP 0.22MF X5R 0603	20%	6.3V
U	C3529		CERAMIC CHIP 0.22MF X5R 0603	20%	6.3V
U	C3530		CERAMIC CHIP 0.33MF X5R (0603)	10%	6.3V
U	C3531		CERAMIC CHIP 0.33MF X5R (0603)	10%	6.3V
U	C3532		CERAMIC CHIP 0.022MF X5R(0603)	10%	10V
U	C3534		CERAMIC CHIP 10MF X6S 1608	20%	16V
S	C3535	1-118-660-11	ELECT CHIP 220MF	20%	16V
U	C3535	1-118-671-11	ELECT CHIP 220MF	20%	16V
U	C3535	1-120-812-11	ELECT CHIP 220MF	20%	16V
U	C3538		CERAMIC CHIP 0.1MF X5R (0603)	10%	16V
U	C3540		CERAMIC CHIP 1UF X5R (0603)	20%	6.3V
U	C3541		CERAMIC CHIP 4.7UFX5R(1106)	20%	6.3V
U	C3542		CERAMIC CHIP (22MF)	20%	6.3V
U	C3544		CERAMIC CHIP 10MF X6S 1608	20%	16V
U	C3545		CERAMIC CHIP 0.047MF X7R 1005	10%	25V
U	C3593		CERAMIC CHIP 0.1MF X5R (0603)	10%	16V
U	C3605		CERAMIC CHIP 0.1MF X5R (0603)	10%	16V
U	C3606		CERAMIC CHIP 0.1MF X5R (0603)	10%	16V
U	C3607		CERAMIC CHIP 0.22MF X5R 0603	20%	6.3V
U	C3608		CERAMIC CHIP 0.22MF X5R 0603	20%	6.3V
S	C3609	1-118-660-11	ELECT CHIP 220MF	20%	16V
U	C3609	1-118-671-11	ELECT CHIP 220MF	20%	16V
U	C3609	1-120-812-11	ELECT CHIP 220MF	20%	16V
S	C3610	1-118-660-11	ELECT CHIP 220MF	20%	16V
U	C3610	1-118-671-11	ELECT CHIP 220MF	20%	16V
U	C3610	1-120-812-11	ELECT CHIP 220MF	20%	16V
U	C3613		CERAMIC CHIP 0.1MF X5R (0603)	10%	16V
U	C3614		CERAMIC CHIP 0.1MF X5R (0603)	10%	16V
U	C3620		CERAMIC CHIP 0.33MF X5R (0603)	10%	6.3V
U	C3621		CERAMIC CHIP 0.33MF X5R (0603)	10%	6.3V
U	C3626		CERAMIC CHIP 0.1MF X5R (0603)	10%	16V

Reproduction Prohibited

SC	Ref. No.	Part No.	Description	Remark	
U	C3627		CERAMIC CHIP 0.22MF X5R 0603	20%	6.3V
U	C3628		CERAMIC CHIP 0.22MF X5R 0603	20%	6.3V
S	C3629	1-118-660-11	ELECT CHIP 220MF	20%	16V
U	C3629	1-118-671-11	ELECT CHIP 220MF	20%	16V
U	C3629	1-120-812-11	ELECT CHIP 220MF	20%	16V
U	C3631		CERAMIC CHIP 0.1MF X5R (0603)	10%	16V
U	C3632		CERAMIC CHIP 0.33MF X5R (0603)	10%	6.3V
U	C3633		CERAMIC CHIP 0.33MF X5R (0603)	10%	6.3V
U	C3636		CERAMIC CHIP (22MF)	20%	6.3V
U	C3637		CERAMIC CHIP (22MF)	20%	6.3V
U	C4001		CERAMIC CHIP 0.1MF X5R 0603	10%	6.3V
U	C4002		CERAMIC CHIP 0.1MF X5R 0603	10%	6.3V
U	C4003		CERAMIC CHIP 0.1MF X5R 0603	10%	6.3V
U	C4004		CERAMIC CHIP 0.01MF X5R (0603)	10%	16V
U	C4005		CERAMIC CHIP 0.01MF X5R (0603)	10%	16V
U	C4006		CERAMIC CHIP 1UF X5R (0603)	20%	6.3V
U	C4007		CERAMIC CHIP 10UF X5R (1106)	20%	6.3V
U	C4008		CERAMIC CHIP 0.1MF X5R 0603	10%	6.3V
U	C4009		CERAMIC CHIP 0.1MF X5R 0603	10%	6.3V
U	C4010		CERAMIC CHIP 0.01MF X5R (0603)	10%	16V
U	C4011		CERAMIC CHIP 1UF X5R (0603)	20%	6.3V
U	C4012		CERAMIC CHIP 0.1MF X5R 0603	10%	6.3V
U	C4013		CERAMIC CHIP 1UF X5R (0603)	20%	6.3V
U	C4014		CERAMIC CHIP 0.1MF X5R 0603	10%	6.3V
U	C4015		CERAMIC CHIP 0.1MF X5R 0603	10%	6.3V
U	C4016		CERAMIC CHIP 0.01MF X5R (0603)	10%	16V
U	C4017		CERAMIC CHIP 0.01MF X5R (0603)	10%	16V
U	C4018		CERAMIC CHIP 1UF X5R (0603)	20%	6.3V
U	C4019		CERAMIC CHIP 10UF X5R (1106)	20%	6.3V
U	C4020		CERAMIC CHIP 0.1MF X5R 0603	10%	6.3V
U	C4021		CERAMIC CHIP 0.01MF X5R (0603)	10%	16V
U	C4022		CERAMIC CHIP 1UF X5R (0603)	20%	6.3V
U	C4023		CERAMIC CHIP 0.1MF X5R 0603	10%	6.3V
U	C4024		CERAMIC CHIP 1UF X5R (0603)	20%	6.3V
U	C4025		CERAMIC CHIP 0.1MF X5R 0603	10%	6.3V
U	C4026		CERAMIC CHIP 0.1MF X5R 0603	10%	6.3V
U	C4027		CERAMIC CHIP 0.01MF X5R (0603)	10%	16V
U	C4028		CERAMIC CHIP 0.01MF X5R (0603)	10%	16V
U	C4029		CERAMIC CHIP 1UF X5R (0603)	20%	6.3V
U	C4030		CERAMIC CHIP 10UF X5R (1106)	20%	6.3V
U	C4031		CERAMIC CHIP 0.1MF X5R 0603	10%	6.3V
U	C4032		CERAMIC CHIP 0.01MF X5R (0603)	10%	16V
U	C4033		CERAMIC CHIP 1UF X5R (0603)	20%	6.3V
U	C4034		CERAMIC CHIP 0.1MF X5R 0603	10%	6.3V
U	C4035		CERAMIC CHIP 1UF X5R (0603)	20%	6.3V

SC	Ref. No.	Part No.	Description	Remark	
U	C4036		CERAMIC CHIP 0.1MF X5R 0603	10%	6.3V
U	C4037		CERAMIC CHIP 0.1MF X5R 0603	10%	6.3V
U	C4038		CERAMIC CHIP 0.01MF X5R (0603)	10%	16V
U	C4039		CERAMIC CHIP 0.01MF X5R (0603)	10%	16V
U	C4040		CERAMIC CHIP 1UF X5R (0603)	20%	6.3V
U	C4041		CERAMIC CHIP 10UF X5R (1106)	20%	6.3V
U	C4042		CERAMIC CHIP 0.1MF X5R 0603	10%	6.3V
U	C4043		CERAMIC CHIP 0.01MF X5R (0603)	10%	16V
U	C4044		CERAMIC CHIP 1UF X5R (0603)	20%	6.3V
U	C4045		CERAMIC CHIP 0.01MF X5R (0603)	10%	16V
U	C4046		CERAMIC CHIP 1UF X5R (0603)	20%	6.3V
U	C4047		CERAMIC CHIP 0.1MF X5R 0603	10%	6.3V
U	C4048		CERAMIC CHIP 0.1MF X5R 0603	10%	6.3V
U	C4049		CERAMIC CHIP 0.01MF X5R (0603)	10%	16V
U	C4050		CERAMIC CHIP 0.01MF X5R (0603)	10%	16V
U	C4051		CERAMIC CHIP 0.1MF X5R 0603	10%	6.3V
U	C4052		CERAMIC CHIP 0.01MF X5R (0603)	10%	16V
U	C4053		CERAMIC CHIP 10UF X5R (1106)	20%	6.3V
U	C4054		CERAMIC CHIP 0.01MF X5R (0603)	10%	16V
U	C4055		CERAMIC CHIP 10UF X5R (1106)	20%	6.3V
U	C4056		CERAMIC CHIP 0.1MF X5R 0603	10%	6.3V
U	C4057		CERAMIC CHIP 0.1MF X5R 0603	10%	6.3V
U	C4058		CERAMIC CHIP 0.01MF X5R (0603)	10%	16V
U	C4059		CERAMIC CHIP 0.01MF X5R (0603)	10%	16V
U	C4060		CERAMIC CHIP 0.1MF X5R 0603	10%	6.3V
U	C4061		CERAMIC CHIP 0.01MF X5R (0603)	10%	16V
U	C4062		CERAMIC CHIP 0.01MF X5R (0603)	10%	16V
U	C4063		CERAMIC CHIP 1UF X5R (0603)	20%	6.3V
U	C4064		CERAMIC CHIP 0.1MF X5R 0603	10%	6.3V
U	C4065		CERAMIC CHIP 10UF X5R (1106)	20%	6.3V
U	C4066		CERAMIC CHIP 1UF X5R (0603)	20%	6.3V
U	C4067		CERAMIC CHIP 0.1MF X5R 0603	10%	6.3V
U	C4068		CERAMIC CHIP 0.1MF X5R 0603	10%	6.3V
U	C4069		CERAMIC CHIP 0.1MF X5R 0603	10%	6.3V
U	C4070		CERAMIC CHIP 0.1MF X5R 0603	10%	6.3V
U	C4071		CERAMIC CHIP 0.1MF X5R 0603	10%	6.3V
U	C4072		CERAMIC CHIP 10UF X5R (1106)	20%	6.3V
U	C4073		CERAMIC CHIP 0.1MF X5R 0603	10%	6.3V
U	C4074		CERAMIC CHIP 0.1MF X5R 0603	10%	6.3V
U	C4075		CERAMIC CHIP 1UF X5R (0603)	20%	6.3V
U	C4076		CERAMIC CHIP 0.1MF X5R 0603	10%	6.3V
U	C4077		CERAMIC CHIP 0.1MF X5R 0603	10%	6.3V
U	C4078		CERAMIC CHIP 0.1MF X5R 0603	10%	6.3V
U	C4079		CERAMIC CHIP 0.01MF X5R (0603)	10%	16V
U	C4080		CERAMIC CHIP 1UF X5R (0603)	20%	6.3V

SC	Ref. No.	Part No.	Description	Remark	
U	C4081		CERAMIC CHIP 2200PF X7R 0603	10%	25V
U	C4082		CERAMIC CHIP 0.22MF X5R (0603)	10%	16V
U	C4083		CERAMIC CHIP 0.22MF X5R (0603)	10%	16V
U	C4084		CERAMIC CHIP 0.22MF X5R (0603)	10%	16V
U	C4085		CERAMIC CHIP 0.22MF X5R (0603)	10%	16V
U	C4086		CERAMIC CHIP 0.22MF X5R (0603)	10%	16V
U	C4087		CERAMIC CHIP 0.22MF X5R (0603)	10%	16V
U	C4088		CERAMIC CHIP 0.22MF X5R (0603)	10%	16V
U	C4089		CERAMIC CHIP 0.22MF X5R (0603)	10%	16V
U	C4090		CERAMIC CHIP 0.22MF X5R (0603)	10%	16V
U	C4091		CERAMIC CHIP 0.22MF X5R (0603)	10%	16V
U	C4092		CERAMIC CHIP 0.22MF X5R (0603)	10%	16V
U	C4093		CERAMIC CHIP 0.22MF X5R (0603)	10%	16V
U	C4094		CERAMIC CHIP 0.22MF X5R (0603)	10%	16V
U	C4095		CERAMIC CHIP 0.22MF X5R (0603)	10%	16V
U	C4096		CERAMIC CHIP 0.22MF X5R (0603)	10%	16V
U	C4097		CERAMIC CHIP 0.22MF X5R (0603)	10%	16V
U	C4098		CERAMIC CHIP 0.22MF X5R (0603)	10%	16V
U	C4099		CERAMIC CHIP 0.22MF X5R (0603)	10%	16V
U	C4100		CERAMIC CHIP 0.1MF X5R 0603	10%	6.3V
U	C4101		CERAMIC CHIP 1000PF X7R 0603	10%	50V
U	C4102		CERAMIC CHIP 1UF X5R (0603)	20%	6.3V
U	C4103		CERAMIC CHIP 0.1MF X5R 0603	10%	6.3V
U	C4104		CERAMIC CHIP 0.01MF X5R (0603)	10%	16V
U	C4105		CERAMIC CHIP 2200PF X7R 0603	10%	25V
U	C4106		CERAMIC CHIP 0.1MF X5R 0603	10%	6.3V
U	C4107		CERAMIC CHIP 0.1MF X5R 0603	10%	6.3V
U	C4108		CERAMIC CHIP 0.1MF X5R 0603	10%	6.3V
U	C4109		CERAMIC CHIP 2200PF X7R 0603	10%	25V
U	C4110		CERAMIC CHIP 1UF X5R (0603)	20%	6.3V
U	C4111		CERAMIC CHIP 0.01MF X5R (0603)	10%	16V
U	C4112		CERAMIC CHIP 0.1MF X5R 0603	10%	6.3V
U	C4113		CERAMIC CHIP 10UF X5R (1106)	20%	6.3V
U	C4114		CERAMIC CHIP 0.01MF X5R (0603)	10%	16V
U	C4115		CERAMIC CHIP 0.01MF X5R (0603)	10%	16V
U	C4116		CERAMIC CHIP 0.01MF X5R (0603)	10%	16V
U	C4117		CERAMIC CHIP 0.01MF X5R (0603)	10%	16V
U	C4118		CERAMIC CHIP 0.1MF X5R 0603	10%	6.3V
U	C4119		CERAMIC CHIP 0.1MF X5R 0603	10%	6.3V
U	C4120		CERAMIC CHIP 0.1MF X5R 0603	10%	6.3V
U	C4121		CERAMIC CHIP 0.1MF X5R 0603	10%	6.3V
U	C4201		CERAMIC CHIP 1UF X5R (0603)	20%	6.3V
U	C4202		CERAMIC CHIP 10UF X5R (1106)	20%	6.3V
U	C4203		CERAMIC CHIP 1UF X5R (0603)	20%	6.3V
U	C4204		CERAMIC CHIP 10UF X5R (1106)	20%	6.3V

SC	Ref. No.	Part No.	Description	Remark	
U	C4205		CERAMIC CHIP 0.1MF X5R 0603	10%	6.3V
U	C4206		CERAMIC CHIP 0.1MF X5R 0603	10%	6.3V
U	C4207		CERAMIC CHIP 1UF X5R (0603)	20%	6.3V
U	C4208		CERAMIC CHIP 1UF X5R (0603)	20%	6.3V
U	C4209		CERAMIC CHIP 0.1MF X5R 0603	10%	6.3V
U	C4210		CERAMIC CHIP 0.1MF X5R 0603	10%	6.3V
U	C4211		CERAMIC CHIP 0.01MF X5R (0603)	10%	16V
U	C4212		CERAMIC CHIP 0.1MF X5R 0603	10%	6.3V
U	C4213		CERAMIC CHIP 0.1MF X5R 0603	10%	6.3V
U	C4214		CERAMIC CHIP 0.1MF X5R 0603	10%	6.3V
U	C4215		CERAMIC CHIP 0.01MF X5R (0603)	10%	16V
U	C4216		CERAMIC CHIP 0.1MF X5R 0603	10%	6.3V
U	C4217		CERAMIC CHIP 0.1MF X5R 0603	10%	6.3V
U	C4218		CERAMIC CHIP 0.1MF X5R 0603	10%	6.3V
U	C4219		CERAMIC CHIP 0.01MF X5R (0603)	10%	16V
U	C4220		CERAMIC CHIP 0.1MF X5R 0603	10%	6.3V
U	C4221		CERAMIC CHIP 0.1MF X5R 0603	10%	6.3V
U	C4222		CERAMIC CHIP 0.1MF X5R 0603	10%	6.3V
U	C4223		CERAMIC CHIP 0.01MF X5R (0603)	10%	16V
U	C4224		CERAMIC CHIP 0.1MF X5R 0603	10%	6.3V
U	C4225		CERAMIC CHIP 0.1MF X5R 0603	10%	6.3V
U	C4226		CERAMIC CHIP 0.1MF X5R 0603	10%	6.3V
U	C4227		CERAMIC CHIP 0.01MF X5R (0603)	10%	16V
U	C4228		CERAMIC CHIP 0.1MF X5R 0603	10%	6.3V
U	C4229		CERAMIC CHIP 0.1MF X5R 0603	10%	6.3V
U	C4230		CERAMIC CHIP 0.1MF X5R 0603	10%	6.3V
U	C4231		CERAMIC CHIP 0.01MF X5R (0603)	10%	16V
U	C4232		CERAMIC CHIP 0.1MF X5R 0603	10%	6.3V
U	C4233		CERAMIC CHIP 0.1MF X5R 0603	10%	6.3V
U	C4234		CERAMIC CHIP 0.1MF X5R 0603	10%	6.3V
U	C4235		CERAMIC CHIP 0.01MF X5R (0603)	10%	16V
U	C4236		CERAMIC CHIP 0.1MF X5R 0603	10%	6.3V
U	C4237		CERAMIC CHIP 0.1MF X5R 0603	10%	6.3V
U	C4238		CERAMIC CHIP 0.1MF X5R 0603	10%	6.3V
U	C4239		CERAMIC CHIP 0.01MF X5R (0603)	10%	16V
U	C4240		CERAMIC CHIP 0.1MF X5R 0603	10%	6.3V
U	C4241		CERAMIC CHIP 0.1MF X5R 0603	10%	6.3V
U	C4242		CERAMIC CHIP 0.1MF X5R 0603	10%	6.3V
U	C4243		CERAMIC CHIP 0.01MF X5R (0603)	10%	16V
U	C4244		CERAMIC CHIP 0.1MF X5R 0603	10%	6.3V
U	C4245		CERAMIC CHIP 0.1MF X5R 0603	10%	6.3V
U	C4246		CERAMIC CHIP 0.1MF X5R 0603	10%	6.3V
U	C4247		CERAMIC CHIP 0.01MF X5R (0603)	10%	16V
U	C4248		CERAMIC CHIP 0.1MF X5R 0603	10%	6.3V
U	C4249		CERAMIC CHIP 0.1MF X5R 0603	10%	6.3V

Reproduction Prohibited

SC	Ref. No.	Part No.	Description	Remark		
U	C4250		CERAMIC CHIP 0.1MF X5R 0603	10%	6.3V	
U	C4251		CERAMIC CHIP 0.01MF X5R (0603)	10%	16V	
U	C4252		CERAMIC CHIP 0.1MF X5R 0603	10%	6.3V	
U	C4253		CERAMIC CHIP 0.1MF X5R 0603	10%	6.3V	
U	C4254		CERAMIC CHIP 0.1MF X5R 0603	10%	6.3V	
U	C4255		CERAMIC CHIP 0.01MF X5R (0603)	10%	16V	
U	C4256		CERAMIC CHIP 0.1MF X5R 0603	10%	6.3V	
U	C4257		CERAMIC CHIP 0.1MF X5R 0603	10%	6.3V	
U	C4258		CERAMIC CHIP 0.1MF X5R 0603	10%	6.3V	
U	C4259		CERAMIC CHIP 0.01MF X5R (0603)	10%	16V	
U	C4260		CERAMIC CHIP 0.1MF X5R 0603	10%	6.3V	
U	C4261		CERAMIC CHIP 0.1MF X5R 0603	10%	6.3V	
U	C4262		CERAMIC CHIP 0.01MF X5R (0603)	10%	16V	
U	C4263		CERAMIC CHIP 0.1MF X5R 0603	10%	6.3V	
U	C4264		CERAMIC CHIP 0.1MF X5R 0603	10%	6.3V	
U	C4265		CERAMIC CHIP 0.01MF X5R (0603)	10%	16V	
U	C4266		CERAMIC CHIP 0.1MF X5R 0603	10%	6.3V	
U	C4267		CERAMIC CHIP 0.1MF X5R 0603	10%	6.3V	
U	C4268		CERAMIC CHIP 0.01MF X5R (0603)	10%	16V	
U	C4269		CERAMIC CHIP 0.1MF X5R 0603	10%	6.3V	
U	C4270		CERAMIC CHIP 0.1MF X5R 0603	10%	6.3V	
U	C4271		CERAMIC CHIP 0.01MF X5R (0603)	10%	16V	
U	C4272		CERAMIC CHIP 0.1MF X5R 0603	10%	6.3V	
U	C4273		CERAMIC CHIP 0.1MF X5R 0603	10%	6.3V	
U	C4274		CERAMIC CHIP 0.01MF X5R (0603)	10%	16V	
U	C4275		CERAMIC CHIP 0.1MF X5R 0603	10%	6.3V	
U	C4276		CERAMIC CHIP 0.1MF X5R 0603	10%	6.3V	
U	C4277		CERAMIC CHIP 0.01MF X5R (0603)	10%	16V	
U	C4278		CERAMIC CHIP 0.1MF X5R 0603	10%	6.3V	
U	C4279		CERAMIC CHIP 0.1MF X5R 0603	10%	6.3V	
U	C4280		CERAMIC CHIP 0.01MF X5R (0603)	10%	16V	
U	C4281		CERAMIC CHIP 0.1MF X5R 0603	10%	6.3V	
U	C4282		CERAMIC CHIP 0.1MF X5R 0603	10%	6.3V	
U	C4283		CERAMIC CHIP 0.01MF X5R (0603)	10%	16V	
U	C4284		CERAMIC CHIP 0.1MF X5R 0603	10%	6.3V	
U	C4285		CERAMIC CHIP 0.1MF X5R 0603	10%	6.3V	
U	C4286		CERAMIC CHIP 0.01MF X5R (0603)	10%	16V	
U	C4287		CERAMIC CHIP 0.1MF X5R 0603	10%	6.3V	
U	C4288		CERAMIC CHIP 0.1MF X5R 0603	10%	6.3V	
U	C4289		CERAMIC CHIP 0.01MF X5R (0603)	10%	16V	
U	C4290		CERAMIC CHIP 0.1MF X5R 0603	10%	6.3V	
U	C4291		CERAMIC CHIP 0.1MF X5R 0603	10%	6.3V	
U	C4292		CERAMIC CHIP 0.01MF X5R (0603)	10%	16V	
U	C4293		CERAMIC CHIP 0.1MF X5R 0603	10%	6.3V	
U	C4294		CERAMIC CHIP 0.01MF X5R (0603)	10%	16V	

SC	Ref. No.	Part No.	Description	Remark		
U	C4295		CERAMIC CHIP 0.1MF X5R 0603	10%	6.3V	
U	C4296		CERAMIC CHIP 0.01MF X5R (0603)	10%	16V	
U	C4297		CERAMIC CHIP 0.1MF X5R 0603	10%	6.3V	
U	C4298		CERAMIC CHIP 0.01MF X5R (0603)	10%	16V	
U	C4299		CERAMIC CHIP 0.1MF X5R 0603	10%	6.3V	
U	C4300		CERAMIC CHIP 0.01MF X5R (0603)	10%	16V	
U	C4301		CERAMIC CHIP 0.1MF X5R 0603	10%	6.3V	
U	C4302		CERAMIC CHIP 0.01MF X5R (0603)	10%	16V	
U	C4303		CERAMIC CHIP 0.1MF X5R 0603	10%	6.3V	
U	C4304		CERAMIC CHIP 0.01MF X5R (0603)	10%	16V	
U	C4305		CERAMIC CHIP 0.1MF X5R 0603	10%	6.3V	
U	C4306		CERAMIC CHIP 0.01MF X5R (0603)	10%	16V	
U	C4307		CERAMIC CHIP 0.1MF X5R 0603	10%	6.3V	
U	C4308		CERAMIC CHIP 0.01MF X5R (0603)	10%	16V	
U	C4309		CERAMIC CHIP 0.1MF X5R 0603	10%	6.3V	
U	C4310		CERAMIC CHIP 0.01MF X5R (0603)	10%	16V	
U	C4311		CERAMIC CHIP 0.1MF X5R 0603	10%	6.3V	
U	C4312		CERAMIC CHIP 0.01MF X5R (0603)	10%	16V	
U	C4313		CERAMIC CHIP 0.1MF X5R 0603	10%	6.3V	
U	C4314		CERAMIC CHIP 0.01MF X5R (0603)	10%	16V	
U	C4315		CERAMIC CHIP 0.1MF X5R 0603	10%	6.3V	
U	C4316		CERAMIC CHIP 0.01MF X5R (0603)	10%	16V	
U	C4503		CERAMIC CHIP 0.1MF X5R 0603	10%	6.3V	
U	C5001		CERAMIC CHIP 10UF X5R (1106)	20%	6.3V	
U	C5002		CERAMIC CHIP 0.1MF X5R 0603	10%	6.3V	
U	C5003		CERAMIC CHIP 2.2MF X5R 1005	20%	6.3V	
U	C5004		CERAMIC CHIP 1UF X5R (0603)	20%	6.3V	
U	C5005		CERAMIC CHIP 1UF X5R (0603)	20%	6.3V	
U	C5006		CERAMIC CHIP 1UF X5R (0603)	20%	6.3V	
U	C5007		CERAMIC CHIP 1UF X5R (0603)	20%	6.3V	
U	C5008		CERAMIC CHIP 1UF X5R (0603)	20%	6.3V	
U	C5009		CERAMIC CHIP 1UF X5R (0603)	20%	6.3V	
U	C5010		CERAMIC CHIP 2.2MF X5R 1005	20%	6.3V	
U	C5011		CERAMIC CHIP 2.2MF X5R 1005	20%	6.3V	
U	C5012		CERAMIC CHIP 2.2MF X5R 1005	20%	6.3V	
U	C5013		CERAMIC CHIP 2.2MF X5R 1005	20%	6.3V	
U	C5014		CERAMIC CHIP 10UF X5R (1106)	20%	6.3V	
U	C5015		CERAMIC CHIP 10UF X5R (1106)	20%	6.3V	
U	C5016		CERAMIC CHIP (22MF)	20%	6.3V	
U	C5017		CERAMIC CHIP 1UF X5R (0603)	20%	6.3V	
U	C5018		CERAMIC CHIP 2.2MF X5R 1005	20%	6.3V	
U	C5019		CERAMIC CHIP 4.7UFX5R(1106)	20%	6.3V	
U	C5020		CERAMIC CHIP 0.1MF X5R 0603	10%	6.3V	
U	C5021		CERAMIC CHIP 0.1MF X5R 0603	10%	6.3V	
U	C5022		CERAMIC CHIP 0.1MF X5R 0603	10%	6.3V	

SC	Ref. No.	Part No.	Description	Remark		
U	C5023		CERAMIC CHIP 0.1MF X5R 0603	10%	6.3V	
U	C5024		CERAMIC CHIP 0.1MF X5R 0603	10%	6.3V	
U	C5025		CERAMIC CHIP 0.1MF X5R 0603	10%	6.3V	
U	C5026		CERAMIC CHIP 0.1MF X5R 0603	10%	6.3V	
U	C5027		CERAMIC CHIP 0.1MF X5R 0603	10%	6.3V	
U	C5028		CERAMIC CHIP 0.1MF X5R 0603	10%	6.3V	
U	C5029		CERAMIC CHIP 0.1MF X5R 0603	10%	6.3V	
U	C5030		CERAMIC CHIP 0.1MF X5R 0603	10%	6.3V	
U	C5031		CERAMIC CHIP 0.1MF X5R 0603	10%	6.3V	
U	C5032		CERAMIC CHIP 0.1MF X5R 0603	10%	6.3V	
U	C5033		CERAMIC CHIP 0.1MF X5R 0603	10%	6.3V	
U	C5034		CERAMIC CHIP 1UF X5R (0603)	20%	6.3V	
U	C5035		CERAMIC CHIP 0.1MF X5R 0603	10%	6.3V	
U	C5036		CERAMIC CHIP 0.1MF X5R 0603	10%	6.3V	
U	C5037		CERAMIC CHIP 4.7UFX5R(1106)	20%	6.3V	
U	C5038		CERAMIC CHIP 0.1MF X5R 0603	10%	6.3V	
U	C5039		CERAMIC CHIP 0.1MF X5R 0603	10%	6.3V	
U	C5040		CERAMIC CHIP 0.1MF X5R 0603	10%	6.3V	
U	C5041		CERAMIC CHIP 0.1MF X5R 0603	10%	6.3V	
U	C5042		CERAMIC CHIP 2.2MF X5R 1005	20%	6.3V	
U	C5043		CERAMIC CHIP 0.1MF X5R 0603	10%	6.3V	
U	C5044		CERAMIC CHIP 0.1MF X5R 0603	10%	6.3V	
U	C5045		CERAMIC CHIP 0.1MF X5R 0603	10%	6.3V	
U	C5047		CERAMIC CHIP 1UF X5R (0603)	20%	6.3V	
U	C5048		CERAMIC CHIP 0.1MF X5R 0603	10%	6.3V	
U	C5049		CERAMIC CHIP 0.1MF X5R 0603	10%	6.3V	
U	C5050		CERAMIC CHIP 0.1MF X5R 0603	10%	6.3V	
U	C5051		CERAMIC CHIP 1UF X5R (0603)	20%	6.3V	
U	C5052		CERAMIC CHIP 0.1MF X5R 0603	10%	6.3V	
U	C5053		CERAMIC CHIP 0.1MF X5R 0603	10%	6.3V	
U	C5054		CERAMIC CHIP 4.7UFX5R(1106)	20%	6.3V	
U	C5055		CERAMIC CHIP 0.1MF X5R 0603	10%	6.3V	
U	C5056		CERAMIC CHIP 0.01MF X5R (0603)	10%	16V	
U	C5058		CERAMIC CHIP 0.22MF X5R (0603)	10%	16V	
U	C5059		CERAMIC CHIP 0.22MF X5R (0603)	10%	16V	
U	C5064		CERAMIC CHIP 10PF C0G 0603	5%	50V	
U	C5065		CERAMIC CHIP 10PF C0G 0603	5%	50V	
U	C5066		CERAMIC CHIP 22PF C0G 0603	5%	50V	
U	C5067		CERAMIC CHIP 18PF C0G 0603	5%	50V	
U	C5068		CERAMIC CHIP 0.1MF X5R 0603	10%	6.3V	
U	C5069		CERAMIC CHIP 0.1MF X5R 0603	10%	6.3V	
U	C5070		CERAMIC CHIP 0.1MF X5R 0603	10%	6.3V	
U	C5071		CERAMIC CHIP 0.1MF X5R 0603	10%	6.3V	
U	C5072		CERAMIC CHIP 1UF X5R (0603)	20%	6.3V	
U	C5073		CERAMIC CHIP 0.1MF X5R 0603	10%	6.3V	

SC	Ref. No.	Part No.	Description	Remark		
U	C5077		CERAMIC CHIP 1000PF X7R 0603	10%	50V	
U	C5078		CERAMIC CHIP 1000PF X7R 0603	10%	50V	
U	C5079		CERAMIC CHIP 1000PF X7R 0603	10%	50V	
U	C5101		CERAMIC CHIP 1000PF X7R 0603	10%	50V	
U	C5104		CERAMIC CHIP 1000PF X7R 0603	10%	50V	
U	C5106		CERAMIC CHIP 0.1MF X5R 0603	10%	6.3V	
U	C5109		CERAMIC CHIP 0.01MF X5R (0603)	10%	16V	
U	C5112		CERAMIC CHIP 0.1MF X5R 0603	10%	6.3V	
U	C5113		CERAMIC CHIP 10PF C0G 0603	5%	50V	*
U	C5114		CERAMIC CHIP 10PF C0G 0603	5%	50V	
U	C5116		CERAMIC CHIP 0.1MF X5R 0603	10%	6.3V	
U	C5117		CERAMIC CHIP 0.1MF X5R 0603	10%	6.3V	
U	C5118		CERAMIC CHIP 1UF X5R (0603)	20%	6.3V	
U	C5119		CERAMIC CHIP 0.1MF X5R (0603)	10%	16V	
U	C5120		CERAMIC CHIP 0.01MF X5R (0603)	10%	16V	
U	C5121		CERAMIC CHIP 0.1MF X5R 0603	10%	6.3V	
U	C5122		CERAMIC CHIP 1000PF X7R 0603	10%	50V	
U	C5123		CERAMIC CHIP 1000PF X7R 0603	10%	50V	
U	C5211		CERAMIC CHIP 10UF X5R (1106)	20%	6.3V	
U	C5212		CERAMIC CHIP 0.1MF X5R (0603)	10%	16V	
U	C5216		CERAMIC CHIP 0.1MF X5R (0603)	10%	16V	
U	C5217		CERAMIC CHIP 10UF X5R (1106)	20%	6.3V	
U	C5218		CERAMIC CHIP 10UF X5R (1106)	20%	6.3V	
U	C5219		CERAMIC CHIP 10UF X5R (1106)	20%	6.3V	
U	C5220		CERAMIC CHIP 10UF X5R (1106)	20%	6.3V	
U	C5221		CERAMIC CHIP 10UF X5R (1106)	20%	6.3V	
U	C5222		CERAMIC CHIP 10UF X5R (1106)	20%	6.3V	
U	C5223		CERAMIC CHIP 10UF X5R (1106)	20%	6.3V	
U	C5224		CERAMIC CHIP 10UF X5R (1106)	20%	6.3V	
U	C5225		CERAMIC CHIP 10UF X5R (1106)	20%	6.3V	
U	C5226		CERAMIC CHIP 10UF X5R (1106)	20%	6.3V	
U	C5301		CERAMIC CHIP 1000PF X7R 3216	10%	2kV	
U	C5302		CERAMIC CHIP 0.1MF X5R 0603	10%	6.3V	
U	C5303		CERAMIC CHIP 0.1MF X5R 0603	10%	6.3V	
U	C5304		CERAMIC CHIP 0.1MF X5R 0603	10%	6.3V	
U	C5305		CERAMIC CHIP 0.1MF X5R 0603	10%	6.3V	
U	C5401		CERAMIC CHIP 0.01MF X5R (0603)	10%	16V	*
U	C5402		CERAMIC CHIP 0.01MF X5R (0603)	10%	16V	*
U	C5403		CERAMIC CHIP 0.01MF X5R (0603)	10%	16V	*
U	C5404		CERAMIC CHIP 0.01MF X5R (0603)	10%	16V	*
U	C7004		CERAMIC CHIP 2.2MF X5R 1005	20%	6.3V	
U	C7005		CERAMIC CHIP 47UF X5R (2012)	20%	6.3V	
U	C7006		CERAMIC CHIP 2.2MF X5R 1005	20%	6.3V	
U	C7007		CERAMIC CHIP 47UF X5R (2012)	20%	6.3V	
U	C7008		CERAMIC CHIP 0.01MF X5R (0603)	10%	16V	

Reproduction Prohibited

SC	Ref. No.	Part No.	Description	Remark	
U	C7009		CERAMIC CHIP 0.1MF X5R (0603)	10%	16V
U	C7010		CERAMIC CHIP 10UF X5R (1106)	20%	6.3V
U	C7011		CERAMIC CHIP 2.2MF X5R 1005	20%	6.3V
U	C7012		CERAMIC CHIP 10MF X6S 1608	20%	16V
U	C7013		CERAMIC CHIP (22MF)	20%	6.3V
U	C7014		CERAMIC CHIP (22MF)	20%	6.3V
U	C7015		CERAMIC CHIP 0.01MF X5R (0603)	10%	16V
U	C7016		CERAMIC CHIP (22MF)	20%	6.3V
U	C7017		CERAMIC CHIP 2.2MF X5R 1005	20%	6.3V
U	C7018		CERAMIC CHIP 0.1MF X5R (0603)	10%	16V
U	C7019		CERAMIC CHIP 1.0MF X5R (0603)	20%	10V
U	C7020		CERAMIC CHIP 2.2MF X5R 1005	20%	6.3V
U	C7021		CERAMIC CHIP 1UF X5R (0603)	20%	6.3V
U	C7022		CERAMIC CHIP (22MF)	20%	6.3V
U	C7023		CERAMIC CHIP 2.2MF X5R 1005	20%	6.3V
U	C7024		CERAMIC CHIP 22MF X5R (2012)	20%	16V
U	C7025		CERAMIC CHIP 22MF X5R (2012)	20%	16V
U	C7026		CERAMIC CHIP 22PF C0G 0603	5%	50V
U	C7027		CERAMIC CHIP 22MF X5R (2012)	20%	16V
U	C7028		CERAMIC CHIP 22MF X5R (2012)	20%	16V
U	C7029		CERAMIC CHIP (22MF)	20%	6.3V
U	C7030		CERAMIC CHIP (22MF)	20%	6.3V
U	C7031		CERAMIC CHIP 10MF X6S 1608	20%	16V
U	C7032		CERAMIC CHIP (22MF)	20%	6.3V
U	C7033		CERAMIC CHIP (22MF)	20%	6.3V
U	C7034		CERAMIC CHIP 0.1MF X5R (0603)	10%	16V
U	C7035		CERAMIC CHIP (22MF)	20%	6.3V
U	C7036		CERAMIC CHIP (22MF)	20%	6.3V
U	C7037		CERAMIC CHIP 820PF X7R 0603	10%	50V
S	C7042	1-120-740-11	ELECT CHIP 390MF (6X6)	20%	6.3V
U	C7042	1-120-807-11	ELECT CHIP 390MF (6X6)	20%	6.3V
U	C7042	1-122-191-11	ELECT CHIP 390MF (6X6)	20%	6.3V
U	C7050		CERAMIC CHIP 47UF X5R (2012)	20%	6.3V
U	C7051		CERAMIC CHIP 47UF X5R (2012)	20%	6.3V
U	C7052		CERAMIC CHIP 47UF X5R (2012)	20%	6.3V
U	C7053		CERAMIC CHIP 47UF X5R (2012)	20%	6.3V
U	C7054		CERAMIC CHIP 0.01MF X5R (0603)	10%	16V
U	C7055		CERAMIC CHIP 0.01MF X5R (0603)	10%	16V
U	C7056		CERAMIC CHIP 0.1MF X5R (0603)	10%	16V
U	C7057		CERAMIC CHIP 0.1MF X5R (0603)	10%	16V
U	C7058		CERAMIC CHIP 0.1MF X5R (0603)	10%	16V
U	C7062		CERAMIC CHIP 0.01MF X5R (0603)	10%	16V
U	C7063		CERAMIC CHIP 0.01MF X5R (0603)	10%	16V
U	C7065		CERAMIC CHIP 22PF C0G 0603	5%	50V
U	C7066		CERAMIC CHIP 22PF C0G 0603	5%	50V

SC	Ref. No.	Part No.	Description	Remark	
U	C7069		CERAMIC CHIP (22MF)	20%	6.3V
U	C7070		CERAMIC CHIP (22MF)	20%	6.3V
U	C7071		CERAMIC CHIP (22MF)	20%	6.3V
U	C7072		CERAMIC CHIP (22MF)	20%	6.3V
U	C7073		CERAMIC CHIP 1UF X5R (0603)	20%	6.3V
U	C7074		CERAMIC CHIP 0.1MF X5R (0603)	10%	16V
U	C7075		CERAMIC CHIP 10UF X5R (1106)	20%	6.3V
U	C7076		CERAMIC CHIP 1.0MF X5R (0603)	20%	10V
U	C7077		CERAMIC CHIP 1UF X5R (0603)	20%	6.3V
U	C7078		CERAMIC CHIP 1UF X5R (0603)	20%	6.3V
U	C7079		CERAMIC CHIP 0.022MF X5R(0603)	10%	10V
U	C7080		CERAMIC CHIP 0.1MF X5R (0603)	10%	16V
U	C7081		CERAMIC CHIP 1UF X5R (0603)	20%	6.3V
U	C7082		CERAMIC CHIP 1UF X5R (0603)	20%	6.3V
U	C7083		CERAMIC CHIP 1UF X5R (0603)	20%	6.3V
U	C7084		CERAMIC CHIP (22MF)	20%	6.3V
U	C7085		CERAMIC CHIP 1000PF X7R 0603	10%	50V
U	C7086		CERAMIC CHIP 1UF X5R (0603)	20%	6.3V
U	C7087		CERAMIC CHIP 10PF C0G 0603	5%	50V
U	C7088		CERAMIC CHIP 10PF C0G 0603	5%	50V
U	C7089		CERAMIC CHIP 10PF C0G 0603	5%	50V
U	C7090		CERAMIC CHIP 10PF C0G 0603	5%	50V
U	C7101		CERAMIC CHIP 10UF X5R (1106)	20%	6.3V
U	C7102		CERAMIC CHIP 10UF X5R (1106)	20%	6.3V
U	C7103		CERAMIC CHIP 1.0MF X5R (0603)	20%	10V
U	C7104		CERAMIC CHIP 1.0MF X5R (0603)	20%	10V
U	C7106		CERAMIC CHIP 0.022MF X5R(0603)	10%	10V
U	C7107		CERAMIC CHIP 0.022MF X5R(0603)	10%	10V
U	C7108		CERAMIC CHIP 1.0MF X5R (0603)	20%	10V
U	C7109		CERAMIC CHIP 1.0MF X5R (0603)	20%	10V
U	C7110		CERAMIC CHIP 1.0MF X5R (0603)	20%	10V
U	C7112		CERAMIC CHIP (22MF)	20%	6.3V
U	C7113		CERAMIC CHIP 10MF X6S 1608	20%	16V
U	C7114		CERAMIC CHIP 1UF X5R (0603)	20%	6.3V
U	C7115		CERAMIC CHIP 1UF X5R (0603)	20%	6.3V
U	C7116		CERAMIC CHIP 1UF X5R (0603)	20%	6.3V
U	C7117		CERAMIC CHIP (22MF)	20%	6.3V
U	C7118		CERAMIC CHIP (22MF)	20%	6.3V
U	C7119		CERAMIC CHIP 22PF C0G 0603	5%	50V
U	C7120		CERAMIC CHIP (22MF)	20%	6.3V
U	C7121		CERAMIC CHIP 47UF X5R (2012)	20%	6.3V
U	C7122		CERAMIC CHIP 0.1MF X5R (0603)	10%	16V
U	C7123		CERAMIC CHIP 1.0MF X5R (0603)	20%	10V
U	C7124		CERAMIC CHIP 1000PF X7R 0603	10%	50V
U	C7125		CERAMIC CHIP 1000PF X7R 0603	10%	50V

SC	Ref. No.	Part No.	Description	Remark	
U	C7126		CERAMIC CHIP 22MF X5R (2012)	20%	16V
U	C7127		CERAMIC CHIP 22MF X5R (2012)	20%	16V
U	C7128		CERAMIC CHIP 22MF X5R (2012)	20%	16V
U	C7129		CERAMIC CHIP 0.1MF X5R (0603)	10%	16V
U	C7130		CERAMIC CHIP 820PF X7R 0603	10%	50V
S	C7132	1-120-740-11	ELECT CHIP 390MF (6X6)	20%	6.3V
U	C7132	1-120-807-11	ELECT CHIP 390MF (6X6)	20%	6.3V
U	C7132	1-122-191-11	ELECT CHIP 390MF (6X6)	20%	6.3V
U	C7134		CERAMIC CHIP (22MF)	20%	6.3V
U	C7135		CERAMIC CHIP (22MF)	20%	6.3V
U	C7136		CERAMIC CHIP (22MF)	20%	6.3V
U	C7137		CERAMIC CHIP 22MF X5R (2012)	20%	16V
U	C7138		CERAMIC CHIP 1.0MF X5R (0603)	20%	10V
U	C7139		CERAMIC CHIP 1.0MF X5R (0603)	20%	10V
U	C7140		CERAMIC CHIP 1000PF X7R 0603	10%	50V
U	C7143		CERAMIC CHIP (22MF)	20%	6.3V
U	C7149		CERAMIC CHIP 1000PF X7R 0603	10%	50V
U	C7150		CERAMIC CHIP 1000PF X7R 0603	10%	50V
U	C7151		CERAMIC CHIP 0.1MF X5R (0603)	10%	16V
U	C7152		CERAMIC CHIP 10MF X6S 1608	20%	16V
U	C7153		CERAMIC CHIP 10MF X6S 1608	20%	16V
U	C7154		CERAMIC CHIP 10MF X6S 1608	20%	16V
U	C7155		CERAMIC CHIP 10MF X6S 1608	20%	16V
U	C7156		CERAMIC CHIP 10MF X6S 1608	20%	16V
U	C7157		CERAMIC CHIP 10MF X6S 1608	20%	16V
U	C7158		CERAMIC CHIP 10MF X6S 1608	20%	16V
U	C7159		CERAMIC CHIP 10MF X6S 1608	20%	16V
U	C7160		CERAMIC CHIP 10MF X6S 1608	20%	16V
U	C7161		CERAMIC CHIP 10MF X6S 1608	20%	16V
U	C7162		CERAMIC CHIP 10MF X6S 1608	20%	16V
U	C7163		CERAMIC CHIP 10MF X6S 1608	20%	16V
U	C7164		CERAMIC CHIP 0.1MF X5R (0603)	10%	16V
U	C7165		CERAMIC CHIP 10MF X6S 1608	20%	16V
U	C7166		CERAMIC CHIP 10MF X6S 1608	20%	16V
U	C7167		CERAMIC CHIP 10MF X6S 1608	20%	16V
U	C7169		CERAMIC CHIP 10MF X6S 1608	20%	16V
U	C7170		CERAMIC CHIP 10MF X6S 1608	20%	16V
U	C7171		CERAMIC CHIP 10MF X6S 1608	20%	16V
U	C7173		CERAMIC CHIP 10MF X6S 1608	20%	16V
U	C7174		CERAMIC CHIP 10MF X6S 1608	20%	16V
U	C7175		CERAMIC CHIP 10MF X6S 1608	20%	16V
U	C7177		CERAMIC CHIP 0.1MF X5R (0603)	10%	16V
U	C7178		CERAMIC CHIP 0.1MF X5R (0603)	10%	16V
U	C7179		CERAMIC CHIP 0.1MF X5R (0603)	10%	16V
U	C7180		CERAMIC CHIP 0.1MF X5R (0603)	10%	16V

SC	Ref. No.	Part No.	Description	Remark	
U	C7181		CERAMIC CHIP 0.1MF X5R (0603)	10%	16V
U	C7182		CERAMIC CHIP 0.1MF X5R (0603)	10%	16V
U	C7183		CERAMIC CHIP 0.1MF X5R (0603)	10%	16V
U	C7184		CERAMIC CHIP 0.1MF X5R (0603)	10%	16V
U	C7185		CERAMIC CHIP 0.1MF X5R (0603)	10%	16V
U	C7186		CERAMIC CHIP 0.1MF X5R (0603)	10%	16V
U	C7188		CERAMIC CHIP 820PF X7R 0603	10%	50V
U	C7189		CERAMIC CHIP 820PF X7R 0603	10%	50V
U	C7190		CERAMIC CHIP 820PF X7R 0603	10%	50V
U	C7191		CERAMIC CHIP 0.1MF X5R (0603)	10%	16V
S	C7197	1-007-892-11	ELECT CHIP 560MF (7343)	20%	1.8V
U	C7198		CERAMIC CHIP 0.1MF X5R (0603)	10%	16V
S	C7199	1-007-892-11	ELECT CHIP 560MF (7343)	20%	1.8V
S	C7201	1-007-892-11	ELECT CHIP 560MF (7343)	20%	1.8V
S	C7203	1-007-892-11	ELECT CHIP 560MF (7343)	20%	1.8V
S	C7204	1-007-892-11	ELECT CHIP 560MF (7343)	20%	1.8V
S	C7205	1-007-892-11	ELECT CHIP 560MF (7343)	20%	1.8V
S	C7206	1-007-892-11	ELECT CHIP 560MF (7343)	20%	1.8V
U	C7208		CERAMIC CHIP 0.1MF X5R (0603)	10%	16V
S	C7212	1-007-892-11	ELECT CHIP 560MF (7343)	20%	1.8V
U	C7213		CERAMIC CHIP 10UF X5R (1106)	20%	6.3V
U	C7214		CERAMIC CHIP 1.0MF X5R (0603)	20%	10V
U	C7215		CERAMIC CHIP 0.022MF X5R(0603)	10%	10V
U	C7216		CERAMIC CHIP (22MF)	20%	6.3V
U	C7217		CERAMIC CHIP 1000PF X7R 0603	10%	50V
U	C7228		CERAMIC CHIP 0.022MF X5R(0603)	10%	10V
U	C7229		CERAMIC CHIP 0.022MF X5R(0603)	10%	10V
U	C7231		CERAMIC CHIP 47UF X5R (2012)	20%	6.3V
U	C7232		CERAMIC CHIP 0.1MF X5R (0603)	10%	16V
U	C7233		CERAMIC CHIP 0.01MF X5R (0603)	10%	16V
U	C7234		CERAMIC CHIP 0.01MF X5R (0603)	10%	16V
U	C7235		CERAMIC CHIP 22PF C0G 0603	5%	50V
U	C7236		CERAMIC CHIP (22MF)	20%	6.3V
U	C7237		CERAMIC CHIP (22MF)	20%	6.3V
S	C7244	1-007-892-11	ELECT CHIP 560MF (7343)	20%	1.8V
S	C7245	1-007-892-11	ELECT CHIP 560MF (7343)	20%	1.8V
S	C7247	1-007-892-11	ELECT CHIP 560MF (7343)	20%	1.8V
U	C7301		CERAMIC CHIP 1.0MF X5R (0603)	20%	10V
U	C7302		CERAMIC CHIP 1UF X5R (0603)	20%	6.3V
U	C7303		CERAMIC CHIP 0.1MF X5R (0603)	10%	16V
U	C7304		CERAMIC CHIP 0.1MF X5R (0603)	10%	16V
U	C7306		CERAMIC CHIP 0.01MF X5R (0603)	10%	16V
U	C7307		CERAMIC CHIP 0.01MF X5R (0603)	10%	16V
U	C7308		CERAMIC CHIP 0.22MF X5R 0603	20%	6.3V
U	C7309		CERAMIC CHIP 0.22MF X5R 0603	20%	6.3V

Reproduction Prohibited

SC	Ref. No.	Part No.	Description	Remark	
U	C7311		CERAMIC CHIP 0.01MF X5R (0603)	10%	16V
U	C7312		CERAMIC CHIP 0.01MF X5R (0603)	10%	16V
S	C7313	1-118-660-11	ELECT CHIP 220MF	20%	16V
U	C7313	1-118-671-11	ELECT CHIP 220MF	20%	16V
U	C7313	1-120-812-11	ELECT CHIP 220MF	20%	16V
S	C7314	1-118-660-11	ELECT CHIP 220MF	20%	16V
U	C7314	1-118-671-11	ELECT CHIP 220MF	20%	16V
U	C7314	1-120-812-11	ELECT CHIP 220MF	20%	16V
S	C7315	1-118-660-11	ELECT CHIP 220MF	20%	16V
U	C7315	1-118-671-11	ELECT CHIP 220MF	20%	16V
U	C7315	1-120-812-11	ELECT CHIP 220MF	20%	16V
S	C7316	1-118-660-11	ELECT CHIP 220MF	20%	16V
U	C7316	1-118-671-11	ELECT CHIP 220MF	20%	16V
U	C7316	1-120-812-11	ELECT CHIP 220MF	20%	16V
U	C7317		CERAMIC CHIP 10MF X6S 1608	20%	16V
U	C7318		CERAMIC CHIP 10MF X6S 1608	20%	16V
U	C7319		CERAMIC CHIP 10MF X6S 1608	20%	16V
U	C7320		CERAMIC CHIP 10MF X6S 1608	20%	16V
U	C7321		CERAMIC CHIP 10MF X6S 1608	20%	16V
U	C7322		CERAMIC CHIP 10MF X6S 1608	20%	16V
U	C7323		CERAMIC CHIP 10MF X6S 1608	20%	16V
U	C7324		CERAMIC CHIP 10MF X6S 1608	20%	16V
U	C7325		CERAMIC CHIP 0.22MF X5R 0603	20%	6.3V
U	C7326		CERAMIC CHIP 10MF X6S 1608	20%	16V
U	C7327		CERAMIC CHIP 0.22MF X5R 0603	20%	6.3V
U	C7328		CERAMIC CHIP 10MF X6S 1608	20%	16V
U	C7329		CERAMIC CHIP 0.22MF X5R 0603	20%	6.3V
U	C7330		CERAMIC CHIP 10MF X6S 1608	20%	16V
U	C7331		CERAMIC CHIP 0.22MF X5R 0603	20%	6.3V
U	C7332		CERAMIC CHIP 10MF X6S 1608	20%	16V
U	C7333		CERAMIC CHIP 10MF X6S 1608	20%	16V
U	C7334		CERAMIC CHIP 10MF X6S 1608	20%	16V
U	C7335		CERAMIC CHIP 10MF X6S 1608	20%	16V
U	C7336		CERAMIC CHIP 10MF X6S 1608	20%	16V
U	C7337		CERAMIC CHIP 0.22MF X5R 0603	20%	6.3V
U	C7338		CERAMIC CHIP 0.22MF X5R 0603	20%	6.3V
U	C7339		CERAMIC CHIP 0.1MF X5R (0603)	10%	16V
U	C7341		CERAMIC CHIP 10MF X6S 1608	20%	16V
U	C7342		CERAMIC CHIP 10MF X6S 1608	20%	16V
U	C7343		CERAMIC CHIP 10MF X6S 1608	20%	16V
U	C7344		CERAMIC CHIP 10MF X6S 1608	20%	16V
U	C7345		CERAMIC CHIP 0.1MF X5R (0603)	10%	16V
U	C7346		CERAMIC CHIP 0.1MF X5R (0603)	10%	16V
U	C7347		CERAMIC CHIP 0.1MF X5R (0603)	10%	16V
U	C7348		CERAMIC CHIP 0.1MF X5R (0603)	10%	16V

SC	Ref. No.	Part No.	Description	Remark	
U	C7353		CERAMIC CHIP 820PF X7R 0603	10%	50V
U	C7354		CERAMIC CHIP 820PF X7R 0603	10%	50V
U	C7355		CERAMIC CHIP 820PF X7R 0603	10%	50V
U	C7356		CERAMIC CHIP 820PF X7R 0603	10%	50V
U	C7357		CERAMIC CHIP 22MF X6S (1709)	20%	6.3V
U	C7358		CERAMIC CHIP 22MF X6S (1709)	20%	6.3V
U	C7359		CERAMIC CHIP 22MF X6S (1709)	20%	6.3V
U	C7360		CERAMIC CHIP 22MF X6S (1709)	20%	6.3V
U	C7361		CERAMIC CHIP 22MF X6S (1709)	20%	6.3V
U	C7362		CERAMIC CHIP 22MF X6S (1709)	20%	6.3V
U	C7363		CERAMIC CHIP 22MF X6S (1709)	20%	6.3V
U	C7364		CERAMIC CHIP 22MF X6S (1709)	20%	6.3V
S	C7365	1-007-892-11	ELECT CHIP 560MF (7343)	20%	1.8V
S	C7366	1-007-892-11	ELECT CHIP 560MF (7343)	20%	1.8V
S	C7367	1-007-892-11	ELECT CHIP 560MF (7343)	20%	1.8V
S	C7368	1-007-892-11	ELECT CHIP 560MF (7343)	20%	1.8V
S	C7371	1-118-660-11	ELECT CHIP 220MF	20%	16V
U	C7371	1-118-671-11	ELECT CHIP 220MF	20%	16V
U	C7371	1-120-812-11	ELECT CHIP 220MF	20%	16V
S	C7372	1-118-660-11	ELECT CHIP 220MF	20%	16V
U	C7372	1-118-671-11	ELECT CHIP 220MF	20%	16V
U	C7372	1-120-812-11	ELECT CHIP 220MF	20%	16V
S	C7373	1-118-660-11	ELECT CHIP 220MF	20%	16V
U	C7373	1-118-671-11	ELECT CHIP 220MF	20%	16V
U	C7373	1-120-812-11	ELECT CHIP 220MF	20%	16V
S	C7374	1-118-660-11	ELECT CHIP 220MF	20%	16V
U	C7374	1-118-671-11	ELECT CHIP 220MF	20%	16V
U	C7374	1-120-812-11	ELECT CHIP 220MF	20%	16V
U	C7375		CERAMIC CHIP 10MF X6S 1608	20%	16V
U	C7376		CERAMIC CHIP 10MF X6S 1608	20%	16V
U	C7377		CERAMIC CHIP 10MF X6S 1608	20%	16V
U	C7378		CERAMIC CHIP 10MF X6S 1608	20%	16V
U	C7379		CERAMIC CHIP 10MF X6S 1608	20%	16V
U	C7380		CERAMIC CHIP 10MF X6S 1608	20%	16V
U	C7381		CERAMIC CHIP 10MF X6S 1608	20%	16V
U	C7382		CERAMIC CHIP 10MF X6S 1608	20%	16V
U	C7384		CERAMIC CHIP 10MF X6S 1608	20%	16V
U	C7386		CERAMIC CHIP 10MF X6S 1608	20%	16V
U	C7388		CERAMIC CHIP 10MF X6S 1608	20%	16V
U	C7390		CERAMIC CHIP 10MF X6S 1608	20%	16V
U	C7391		CERAMIC CHIP 10MF X6S 1608	20%	16V
U	C7392		CERAMIC CHIP 10MF X6S 1608	20%	16V
U	C7393		CERAMIC CHIP 10MF X6S 1608	20%	16V
U	C7394		CERAMIC CHIP 10MF X6S 1608	20%	16V
U	C7399		CERAMIC CHIP 10MF X6S 1608	20%	16V

SC	Ref. No.	Part No.	Description	Remark	
U	C7400		CERAMIC CHIP 10MF X6S 1608	20%	16V
U	C7401		CERAMIC CHIP 10MF X6S 1608	20%	16V
U	C7402		CERAMIC CHIP 10MF X6S 1608	20%	16V
U	C7403		CERAMIC CHIP 0.1MF X5R (0603)	10%	16V
U	C7404		CERAMIC CHIP 0.1MF X5R (0603)	10%	16V
U	C7405		CERAMIC CHIP 0.1MF X5R (0603)	10%	16V
U	C7406		CERAMIC CHIP 0.1MF X5R (0603)	10%	16V
U	C7411		CERAMIC CHIP 820PF X7R 0603	10%	50V
U	C7412		CERAMIC CHIP 820PF X7R 0603	10%	50V
U	C7413		CERAMIC CHIP 820PF X7R 0603	10%	50V
U	C7414		CERAMIC CHIP 820PF X7R 0603	10%	50V
U	C7415		CERAMIC CHIP 22MF X6S (1709)	20%	6.3V
U	C7416		CERAMIC CHIP 22MF X6S (1709)	20%	6.3V
U	C7417		CERAMIC CHIP 22MF X6S (1709)	20%	6.3V
U	C7418		CERAMIC CHIP 22MF X6S (1709)	20%	6.3V
U	C7419		CERAMIC CHIP 22MF X6S (1709)	20%	6.3V
U	C7420		CERAMIC CHIP 22MF X6S (1709)	20%	6.3V
U	C7421		CERAMIC CHIP 22MF X6S (1709)	20%	6.3V
U	C7422		CERAMIC CHIP 22MF X6S (1709)	20%	6.3V
S	C7423	1-007-892-11	ELECT CHIP 560MF (7343)	20%	1.8V
S	C7424	1-007-892-11	ELECT CHIP 560MF (7343)	20%	1.8V
S	C7427	1-007-892-11	ELECT CHIP 560MF (7343)	20%	1.8V
S	C7428	1-007-892-11	ELECT CHIP 560MF (7343)	20%	1.8V
S	C7431	1-007-892-11	ELECT CHIP 560MF (7343)	20%	1.8V
S	C7432	1-007-892-11	ELECT CHIP 560MF (7343)	20%	1.8V
U	C7441		CERAMIC CHIP 0.22MF X5R (0603)	10%	16V
U	C7442		CERAMIC CHIP 1.0MF X5R (0603)	20%	10V
U	C7443		CERAMIC CHIP 1.0MF X5R (0603)	20%	10V
U	C7445		CERAMIC CHIP 0.22MF X5R (0603)	10%	16V
U	C7447		CERAMIC CHIP 1.0MF X5R (0603)	20%	10V
U	C7448		CERAMIC CHIP 1.0MF X5R (0603)	20%	10V
U	C7449		CERAMIC CHIP 0.01MF X5R (0603)	10%	16V
U	C7450		CERAMIC CHIP 0.01MF X5R (0603)	10%	16V
U	C7452		CERAMIC CHIP 0.22MF X5R (0603)	10%	16V
U	C7454		CERAMIC CHIP 1.0MF X5R (0603)	20%	10V
U	C7455		CERAMIC CHIP 1.0MF X5R (0603)	20%	10V
U	C7456		CERAMIC CHIP 1.0MF X5R (0603)	20%	10V
U	C7457		CERAMIC CHIP 1.0MF X5R (0603)	20%	10V
U	C7459		CERAMIC CHIP 0.22MF X5R (0603)	10%	16V
U	C7461		CERAMIC CHIP 1.0MF X5R (0603)	20%	10V
U	C7462		CERAMIC CHIP 1.0MF X5R (0603)	20%	10V
U	C7464		CERAMIC CHIP 0.22MF X5R (0603)	10%	16V
U	C7467		CERAMIC CHIP 0.22MF X5R (0603)	10%	16V
U	C7469		CERAMIC CHIP 1.0MF X5R (0603)	20%	10V
U	C7470		CERAMIC CHIP 1.0MF X5R (0603)	20%	10V

SC	Ref. No.	Part No.	Description	Remark	
U	C7472		CERAMIC CHIP 0.22MF X5R (0603)	10%	16V
U	C7474		CERAMIC CHIP 1.0MF X5R (0603)	20%	10V
U	C7475		CERAMIC CHIP 1.0MF X5R (0603)	20%	10V
U	C7476		CERAMIC CHIP 1.0MF X5R (0603)	20%	10V
U	C7477		CERAMIC CHIP 1.0MF X5R (0603)	20%	10V
U	C7479		CERAMIC CHIP 0.22MF X5R (0603)	10%	16V
U	C7501		CERAMIC CHIP (22MF)	20%	6.3V
U	C7502		CERAMIC CHIP (22MF)	20%	6.3V
U	C7503		CERAMIC CHIP 10MF X6S 1608	20%	16V
U	C7504		CERAMIC CHIP (22MF)	20%	6.3V
U	C7505		CERAMIC CHIP (22MF)	20%	6.3V
U	C7506		CERAMIC CHIP (22MF)	20%	6.3V
U	C7507		CERAMIC CHIP 2.2MF X5R 1005	20%	6.3V
U	C7508		CERAMIC CHIP (22MF)	20%	6.3V
U	C7509		CERAMIC CHIP (22MF)	20%	6.3V
U	C7510		CERAMIC CHIP (22MF)	20%	6.3V
U	C7511		CERAMIC CHIP (22MF)	20%	6.3V
U	C7512		CERAMIC CHIP (22MF)	20%	6.3V
U	C7513		CERAMIC CHIP (22MF)	20%	6.3V
U	C7514		CERAMIC CHIP (22MF)	20%	6.3V
U	C7515		CERAMIC CHIP (22MF)	20%	6.3V
U	C7516		CERAMIC CHIP (22MF)	20%	6.3V
U	C7517		CERAMIC CHIP 10UF X5R (1106)	20%	6.3V
U	C7518		CERAMIC CHIP 2.2MF X5R 1005	20%	6.3V
U	C7519		CERAMIC CHIP 2.2MF X5R 1005	20%	6.3V
U	C7520		CERAMIC CHIP (22MF)	20%	6.3V
U	C7521		CERAMIC CHIP 4.7UFX5R(1106)	20%	6.3V
U	C7522		CERAMIC CHIP 10UF X5R (1106)	20%	6.3V
U	C7523		CERAMIC CHIP 4.7UFX5R(1106)	20%	6.3V
U	C7550		CERAMIC CHIP 22MF X5R (2012)	20%	16V
U	C7551		CERAMIC CHIP 22MF X5R (2012)	20%	16V
U	C7552		CERAMIC CHIP 22MF X5R (2012)	20%	16V
U	C7553		CERAMIC CHIP 22MF X5R (2012)	20%	16V
U	C7554		CERAMIC CHIP 1.0MF X5R (0603)	20%	10V
U	C7555		CERAMIC CHIP 0.1MF X5R (0603)	10%	16V
U	C7556		CERAMIC CHIP 820PF X7R 0603	10%	50V
S	C7557	1-120-740-11	ELECT CHIP 390MF (6X6)	20%	6.3V
U	C7557	1-120-807-11	ELECT CHIP 390MF (6X6)	20%	6.3V
U	C7557	1-122-191-11	ELECT CHIP 390MF (6X6)	20%	6.3V
U	C7559		CERAMIC CHIP 1000PF X7R 0603	10%	50V
U	C7561		CERAMIC CHIP 0.1MF X5R (0603)	10%	16V
U	C7562		CERAMIC CHIP 10MF X6S 1608	20%	16V
U	C7563		CERAMIC CHIP 0.1MF X5R (0603)	10%	16V

Reproduction Prohibited

SC	Ref. No.	Part No.	Description	Remark
			< CONNECTOR >	
S	CN3001	1-006-981-11	HDMI CONNECTOR	
U	CN3001	1-006-982-11	HDMI CONNECTOR	
S	CN3501	1-008-389-11	CONNECTOR, FFC/FPC (LIF) 40P	
U	CN3501	1-008-596-11	CONNECTOR, FFC/FPC (LIF) 40P	
S	CN3601	1-008-700-11	CONNECTOR, USB 3.1	
U	CN3601	1-008-928-11	CONNECTOR, USB 3.1	
S	CN3603	1-008-700-11	CONNECTOR, USB 3.1	
U	CN3603	1-008-928-11	CONNECTOR, USB 3.1	
S	CN4501	1-008-378-11	CONNECTOR PCIE M.2 (M)	
U	CN4501	1-008-379-11	CONNECTOR PCIE M.2 (M)	
S	CN5101	1-794-509-21	PIN, CONNECTOR (PC BOARD) (3P)	
U	CN5102	1-843-455-11	CONNECTOR, FFC/FPC (LIF) 6P	
U	CN5102	1-816-654-61	FFC/FPC CONNECTOR (LIF) 6P	
S	CN5102	1-822-787-21	FFC/FPC CONNECTOR (LIF) 6P	
U	CN5103	1-843-455-11	CONNECTOR, FFC/FPC (LIF) 6P	
U	CN5103	1-816-654-61	FFC/FPC CONNECTOR (LIF) 6P	
S	CN5103	1-822-787-21	FFC/FPC CONNECTOR (LIF) 6P	
S	CN5401	1-764-250-21	PIN, CONNECTOR (PC BOARD) 4P	*
S	CN5402	1-008-388-11	CONNECTOR, FFC/FPC (LIF) 25P	*
U	CN5402	1-008-390-11	CONNECTOR, FFC/FPC (LIF) 25P	*
S	CN7001	1-004-688-11	CONNECTOR, BOARD TO BOARD 2P	
S	J5201	1-008-027-11	COAXIAL CONNECTOR (SMT TYPE)	
U	J5201	1-008-834-11	COAXIAL CONNECTOR(SMT TYPE)	
S	J5202	1-008-027-11	COAXIAL CONNECTOR (SMT TYPE)	
U	J5202	1-008-834-11	COAXIAL CONNECTOR(SMT TYPE)	
S	J5203	1-008-027-11	COAXIAL CONNECTOR (SMT TYPE)	
U	J5203	1-008-834-11	COAXIAL CONNECTOR(SMT TYPE)	
S	J5204	1-008-027-11	COAXIAL CONNECTOR (SMT TYPE)	
U	J5204	1-008-834-11	COAXIAL CONNECTOR(SMT TYPE)	
S	J5301	1-844-549-31	ETHERNET CONNECTOR	
U	J5301	1-844-550-11	ETHERNET CONNECTOR	
U	J5301	1-844-551-11	ETHERNET CONNECTOR	
			< DIODE >	
U	D3001		DIODE 1SS352-TPH3	
S	D3003	6-503-646-01	DI CDZVT2R5.6B	
S	D3004	6-503-646-01	DI CDZVT2R5.6B	
S	D3005	6-503-646-01	DI CDZVT2R5.6B	
S	D3006	6-503-646-01	DI CDZVT2R5.6B	
S	D3603	6-503-569-01	DI RB751SM-40T2R	
S	D3604	6-503-569-01	DI RB751SM-40T2R	
S	D3611	6-503-569-01	DI RB751SM-40T2R	
S	D3619	6-900-481-01	DI ESD7104MUTAG	
S	D3624	6-900-481-01	DI ESD7104MUTAG	

SC	Ref. No.	Part No.	Description	Remark
U	D3625		DI RB751SM-40T2R	
U	D3626		DI RB751SM-40T2R	
U	D3627		DI RB751SM-40T2R	
S	D4501	6-503-580-01	DI EDZVT2R3.6B	
S	D4502	6-503-580-01	DI EDZVT2R3.6B	
S	D4503	6-503-580-01	DI EDZVT2R3.6B	
S	D4504	6-901-344-01	DI DF2B5M4SL	
S	D4505	6-901-344-01	DI DF2B5M4SL	
S	D4506	6-901-344-01	DI DF2B5M4SL	
S	D4507	6-901-344-01	DI DF2B5M4SL	
S	D4508	6-901-344-01	DI DF2B5M4SL	
S	D4509	6-901-344-01	DI DF2B5M4SL	
S	D4510	6-901-344-01	DI DF2B5M4SL	
S	D4511	6-901-344-01	DI DF2B5M4SL	
S	D4512	6-901-344-01	DI DF2B5M4SL	
S	D4513	6-901-344-01	DI DF2B5M4SL	
S	D4514	6-901-344-01	DI DF2B5M4SL	
S	D4515	6-901-344-01	DI DF2B5M4SL	
S	D4516	6-901-344-01	DI DF2B5M4SL	
S	D4517	6-901-344-01	DI DF2B5M4SL	
S	D4518	6-901-344-01	DI DF2B5M4SL	
S	D4519	6-901-344-01	DI DF2B5M4SL	
S	D4520	6-504-374-01	DI TPD4E05U06DQAR	
S	D5001	6-503-569-01	DI RB751SM-40T2R	
S	D5002	6-503-569-01	DI RB751SM-40T2R	
			< FUSE >	
U ⚠	F3501	1-523-472-11	FUSE (0435005.KRSC)	5A
U ⚠	F3501	1-523-473-11	FUSE (ERBRD5R00X)	5A
S ⚠	F3501	1-523-478-11	FUSE (FMC10502WH)	5A
U ⚠	F5401	1-008-781-11	FUSE (043502.5KRSC)	2.5A *
U ⚠	F5401	1-523-380-21	FUSE (1005) 2.5A	2.5A *
U ⚠	F5401	1-523-378-11	FUSE, MICRO (1005) 2.5A	2.5A *
U ⚠	F5402	1-008-781-11	FUSE (043502.5KRSC)	2.5A *
U ⚠	F5402	1-523-380-21	FUSE (1005) 2.5A	2.5A *
U ⚠	F5402	1-523-378-11	FUSE, MICRO (1005) 2.5A	2.5A *
U ⚠	F7001	1-523-472-11	FUSE (0435005.KRSC)	5A
U ⚠	F7001	1-523-473-11	FUSE (ERBRD5R00X)	5A
S ⚠	F7001	1-523-478-11	FUSE (FMC10502WH)	5A
U ⚠	F7002	1-523-472-11	FUSE (0435005.KRSC)	5A
U ⚠	F7002	1-523-473-11	FUSE (ERBRD5R00X)	5A
S ⚠	F7002	1-523-478-11	FUSE (FMC10502WH)	5A

SC	Ref. No.	Part No.	Description	Remark
U ⚠	F7003	1-523-472-11	FUSE (0435005.KRSC)	5A
U ⚠	F7003	1-523-473-11	FUSE (ERBRD5R00X)	5A
S ⚠	F7003	1-523-478-11	FUSE (FMC10502WH)	5A
U ⚠	F7501	1-523-472-11	FUSE (0435005.KRSC)	5A
U ⚠	F7501	1-523-473-11	FUSE (ERBRD5R00X)	5A
S ⚠	F7501	1-523-478-11	FUSE (FMC10502WH)	5A
U ⚠	F7502	1-523-472-11	FUSE (0435005.KRSC)	5A
U ⚠	F7502	1-523-473-11	FUSE (ERBRD5R00X)	5A
S ⚠	F7502	1-523-478-11	FUSE (FMC10502WH)	5A
			< FERRITE BEAD >	
S	FB3001	1-481-900-21	INDUCTOR, FERRITE BEADS (1005)	0UH
S	FB3002	1-481-900-21	INDUCTOR, FERRITE BEADS (1005)	0UH
S	FB3003	1-481-900-21	INDUCTOR, FERRITE BEADS (1005)	0UH
S	FB3004	1-481-900-21	INDUCTOR, FERRITE BEADS (1005)	0UH
S	FB3005	1-481-900-21	INDUCTOR, FERRITE BEADS (1005)	0UH
S	FB4001	1-008-961-11	EMI FERRITE (SMD) (1005)	0UH
S	FB4002	1-400-462-21	FERRITE, EMI (SMD) (1005)	0UH
S	FB5001	1-481-348-21	EMI FERRITE (SMD) (1608)	0UH
S	FB5002	1-481-348-21	EMI FERRITE (SMD) (1608)	0UH
S	FB5003	1-481-348-21	EMI FERRITE (SMD) (1608)	0UH
S	FB5004	1-481-348-21	EMI FERRITE (SMD) (1608)	0UH
S	FB5005	1-481-348-21	EMI FERRITE (SMD) (1608)	0UH
S	FB5006	1-481-348-21	EMI FERRITE (SMD) (1608)	0UH
S	FB5007	1-481-348-21	EMI FERRITE (SMD) (1608)	0UH
S	FB5008	1-481-348-21	EMI FERRITE (SMD) (1608)	0UH
S	FB5009	1-481-348-21	EMI FERRITE (SMD) (1608)	0UH
S	FB5010	1-481-348-21	EMI FERRITE (SMD) (1608)	0UH
S	FB5011	1-481-348-21	EMI FERRITE (SMD) (1608)	0UH
S	FB5012	1-481-348-21	EMI FERRITE (SMD) (1608)	0UH
S	FB5013	1-481-348-21	EMI FERRITE (SMD) (1608)	0UH
S	FB5014	1-481-348-21	EMI FERRITE (SMD) (1608)	0UH
			< IC >	
S	IC1002	6-900-269-01	IC CXD90060GG	
S	IC2001	6-901-457-01	IC MT61K512M32KPA-14C:B	
S	IC2001	6-901-331-01	IC K4ZAF325BM-SC14	
S	IC2001	6-901-747-01	IC H56CBM24MIR-S2CR	
U	IC2001	6-901-331-11	IC K4ZAF325BM-SC14TSO	
S	IC2002	6-901-457-01	IC MT61K512M32KPA-14C:B	
S	IC2002	6-901-331-01	IC K4ZAF325BM-SC14	
S	IC2002	6-901-747-01	IC H56CBM24MIR-S2CR	
U	IC2002	6-901-331-11	IC K4ZAF325BM-SC14TSO	
S	IC2101	6-901-457-01	IC MT61K512M32KPA-14C:B	

SC	Ref. No.	Part No.	Description	Remark
S	IC2101	6-901-331-01	IC K4ZAF325BM-SC14	
S	IC2101	6-901-747-01	IC H56CBM24MIR-S2CR	
U	IC2101	6-901-331-11	IC K4ZAF325BM-SC14TSO	
S	IC2102	6-901-457-01	IC MT61K512M32KPA-14C:B	
S	IC2102	6-901-331-01	IC K4ZAF325BM-SC14	
S	IC2102	6-901-747-01	IC H56CBM24MIR-S2CR	
U	IC2102	6-901-331-11	IC K4ZAF325BM-SC14TSO	
S	IC2201	6-901-457-01	IC MT61K512M32KPA-14C:B	
S	IC2201	6-901-331-01	IC K4ZAF325BM-SC14	
S	IC2201	6-901-747-01	IC H56CBM24MIR-S2CR	
U	IC2201	6-901-331-11	IC K4ZAF325BM-SC14TSO	
S	IC2202	6-901-457-01	IC MT61K512M32KPA-14C:B	
S	IC2202	6-901-331-01	IC K4ZAF325BM-SC14	
S	IC2202	6-901-747-01	IC H56CBM24MIR-S2CR	
U	IC2202	6-901-331-11	IC K4ZAF325BM-SC14TSO	
S	IC2301	6-901-457-01	IC MT61K512M32KPA-14C:B	
S	IC2301	6-901-331-01	IC K4ZAF325BM-SC14	
S	IC2301	6-901-747-01	IC H56CBM24MIR-S2CR	
U	IC2301	6-901-331-11	IC K4ZAF325BM-SC14TSO	
S	IC2302	6-901-457-01	IC MT61K512M32KPA-14C:B	
S	IC2302	6-901-331-01	IC K4ZAF325BM-SC14	
S	IC2302	6-901-747-01	IC H56CBM24MIR-S2CR	
U	IC2302	6-901-331-11	IC K4ZAF325BM-SC14TSO	
U 🔒	IC3001	6-901-147-01	IC MN864739	
S	IC3501	6-901-395-01	IC S2MMC01X01	
S	IC3502	6-901-396-01	IC TUSB1044IRNQR	
S	IC3502	6-901-481-01	IC VL181	
S	IC3504	6-901-087-01	IC SIP32419DN-T1GE4-S	
U	IC3504	6-901-339-01	IC TCKE700BNL	
S	IC3505	6-900-977-01	IC AOZ1351DI-01	
S	IC3602	6-722-334-01	IC BD82044FVJ-GE2	
U	IC3602	6-721-630-11	IC TPS2001DDGKR	
S	IC3603	6-722-334-01	IC BD82044FVJ-GE2	
U	IC3603	6-721-630-11	IC TPS2001DDGKR	
S	IC3604	6-722-334-01	IC BD82044FVJ-GE2	
U	IC3604	6-721-630-11	IC TPS2001DDGKR	
S	IC4001	6-901-353-01	IC CXD90062GG	
U	IC4101	6-901-469-01	IC H5AN4G8NBJR-UHCR	
S	IC4101	6-901-392-01	IC K4A4G085WF-BCTD	
U	IC4101	6-901-470-01	IC NT5AD512M8D3-HR	
S	IC4201	6-901-424-01	IC K9BKGD8J1A-TCB0	
S	IC4201	6-901-465-01	IC TH58LJT0T24BA4M	
S	IC4201	6-901-839-01	IC SDQCIBMB-128G-G704	
S	IC4202	6-901-424-01	IC K9BKGD8J1A-TCB0	
S	IC4202	6-901-465-01	IC TH58LJT0T24BA4M	

Reproduction Prohibited

SC	Ref. No.	Part No.	Description	Remark
S	IC4202	6-901-839-01	IC SDQCIBMB-128G-G704	
S	IC4203	6-901-424-01	IC K9BKGD8J1A-TCB0	
S	IC4203	6-901-465-01	IC TH58LJT0T24BA4M	
S	IC4203	6-901-839-01	IC SDQCIBMB-128G-G704	
S	IC4204	6-901-424-01	IC K9BKGD8J1A-TCB0	
S	IC4204	6-901-465-01	IC TH58LJT0T24BA4M	
S	IC4204	6-901-839-01	IC SDQCIBMB-128G-G704	
S	IC4205	6-901-424-01	IC K9BKGD8J1A-TCB0	
S	IC4205	6-901-465-01	IC TH58LJT0T24BA4M	
S	IC4205	6-901-839-01	IC SDQCIBMB-128G-G704	
S	IC4206	6-901-424-01	IC K9BKGD8J1A-TCB0	
S	IC4206	6-901-465-01	IC TH58LJT0T24BA4M	
S	IC4206	6-901-839-01	IC SDQCIBMB-128G-G704	
S	IC5001	6-901-409-01	IC W25Q16JVSNIM	
S	IC5006	6-901-337-01	IC CXD90061GG	
S	IC5101	6-901-387-01	IC SLS 52ASAC6 VQFN32	
S	IC5203	1-008-770-11	WLAN/BT MODULE J20H100	
U	IC7001	6-723-084-11	IC MM3736BRLE	
S	IC7001	6-722-323-01	IC TPS53219ARGTR	
S	IC7002	6-901-085-01	IC DA9065-C3AU2	
U	IC7002	6-901-338-01	IC RT5126GQW	
U	IC7003	6-722-447-01	IC MP9145GQ-C647-Z	
S	IC7003	6-720-856-01	IC TLV62090RGTR	
U	IC7006	6-722-447-01	IC MP9145GQ-C647-Z	
S	IC7006	6-720-856-01	IC TLV62090RGTR	
U	IC7007	6-722-447-01	IC MP9145GQ-C647-Z	
S	IC7007	6-720-856-01	IC TLV62090RGTR	
U	IC7008	6-901-433-01	IC MM4009ANRE	
S	IC7008	6-723-555-01	IC TPS2553DDBVR	
S	IC7009	6-722-334-01	IC BD82044FVJ-GE2	
U	IC7009	6-721-630-11	IC TPS2001DDGKR	
S	IC7010	6-720-829-01	IC MM3504A00RRE	
S	IC7011	6-719-263-01	IC MM3411A18NRE	
U	IC7011	6-901-436-01	IC TLV74318PDBVR	
S	IC7012	6-719-255-01	IC MM3411A09NRE	
U	IC7012	6-901-437-01	IC TLV75509PDBVR	
U	IC7101	6-900-562-01	IC RT5784ALGQWF	
S	IC7101	6-900-742-01	IC TPS62822DLCR	
S	IC7102	6-720-829-01	IC MM3504A00RRE	
S	IC7103	6-720-829-01	IC MM3504A00RRE	
S	IC7104	6-719-430-01	IC MM3411A33NRE	
U	IC7104	6-900-382-01	IC TLV74333PDBVR	
S	IC7105	6-721-719-01	IC MM3526A18NRE	
U	IC7105	6-721-719-11	IC MM3526A18NRH	
U	IC7105	6-900-383-01	IC TLV75518PDBVR	

SC	Ref. No.	Part No.	Description	Remark
S	IC7106	6-721-030-01	IC MM3526A33NRE	
U	IC7106	6-901-355-01	IC TLV75533PDBVR	
U	IC7107	6-723-084-11	IC MM3736BRLE	
S	IC7107	6-722-323-01	IC TPS53219ARGTR	
U	IC7108	6-720-969-01	IC RT8237FZQW	
S	IC7108	6-719-042-11	IC TPS51218DSCR	
U	IC7109	6-720-969-01	IC RT8237FZQW	
S	IC7109	6-719-042-11	IC TPS51218DSCR	
U	IC7110	6-720-969-01	IC RT8237FZQW	
S	IC7110	6-719-042-11	IC TPS51218DSCR	
S	IC7111	6-720-829-01	IC MM3504A00RRE	
U	IC7113	6-722-447-01	IC MP9145GQ-C647-Z	
S	IC7113	6-720-856-01	IC TLV62090RGTR	
S	IC7301	6-901-245-01	IC XDPE14286A-SY01	
S	IC7302	6-901-450-01	IC AOZ5612BQI	
S	IC7302	6-901-115-01	IC NCP252160MNTWG	
U	IC7302	6-901-115-11	IC NCP252160MNTWG	
S	IC7302	6-901-449-01	IC SIC649ACD-T1-GE3-S	
S	IC7303	6-901-450-01	IC AOZ5612BQI	
S	IC7303	6-901-115-01	IC NCP252160MNTWG	
U	IC7303	6-901-115-11	IC NCP252160MNTWG	
S	IC7303	6-901-449-01	IC SIC649ACD-T1-GE3-S	
S	IC7304	6-901-450-01	IC AOZ5612BQI	
S	IC7304	6-901-115-01	IC NCP252160MNTWG	
U	IC7304	6-901-115-11	IC NCP252160MNTWG	
S	IC7304	6-901-449-01	IC SIC649ACD-T1-GE3-S	
S	IC7305	6-901-450-01	IC AOZ5612BQI	
S	IC7305	6-901-115-01	IC NCP252160MNTWG	
U	IC7305	6-901-115-11	IC NCP252160MNTWG	
S	IC7305	6-901-449-01	IC SIC649ACD-T1-GE3-S	
S	IC7306	6-901-450-01	IC AOZ5612BQI	
S	IC7306	6-901-115-01	IC NCP252160MNTWG	
U	IC7306	6-901-115-11	IC NCP252160MNTWG	
S	IC7306	6-901-449-01	IC SIC649ACD-T1-GE3-S	
S	IC7307	6-901-450-01	IC AOZ5612BQI	
S	IC7307	6-901-115-01	IC NCP252160MNTWG	
U	IC7307	6-901-115-11	IC NCP252160MNTWG	
S	IC7307	6-901-449-01	IC SIC649ACD-T1-GE3-S	
S	IC7308	6-901-450-01	IC AOZ5612BQI	
S	IC7308	6-901-115-01	IC NCP252160MNTWG	
U	IC7308	6-901-115-11	IC NCP252160MNTWG	
S	IC7308	6-901-449-01	IC SIC649ACD-T1-GE3-S	
S	IC7309	6-901-450-01	IC AOZ5612BQI	
S	IC7309	6-901-115-01	IC NCP252160MNTWG	
U	IC7309	6-901-115-11	IC NCP252160MNTWG	

SC	Ref. No.	Part No.	Description	Remark
S	IC7309	6-901-449-01	IC SIC649ACD-T1-GE3-S	
U	IC7501	6-901-419-01	IC DA9081-A4AT2	
S	IC7501	6-901-418-01	IC RT5127GQW	
U	IC7550	6-723-084-11	IC MM3736BRLE	
S	IC7550	6-722-323-01	IC TPS53219ARGTR	
			< COIL >	
S	L3001	1-007-492-11	COMMON MODE CHOKE COIL	
S	L3002	1-007-492-11	COMMON MODE CHOKE COIL	
S	L3003	1-007-492-11	COMMON MODE CHOKE COIL	
S	L3004	1-007-492-11	COMMON MODE CHOKE COIL	
S	L3502	1-460-879-11	COMMON MODE CHOKE COIL	
S	L3503	1-460-879-11	COMMON MODE CHOKE COIL	
S	L3504	1-460-879-11	COMMON MODE CHOKE COIL	
S	L3601	1-460-878-11	COMMON MODE CHOKE COIL	
S	L3605	1-460-878-11	COMMON MODE CHOKE COIL	
S	L7001	1-460-741-11	COIL, CHOKE 1.0UH	
S	L7005	1-481-992-11	INDUCTOR 1UH (2520)	
S	L7006	1-460-673-11	CHOKE COIL 1.0UH(ML 2520)	
S	L7007	1-460-673-11	CHOKE COIL 1.0UH(ML 2520)	
S	L7008	1-457-814-11	CHOKE COIL 1.0UH	
S	L7012	1-481-992-11	INDUCTOR 1UH (2520)	
S	L7013	1-481-992-11	INDUCTOR 1UH (2520)	
S	L7101	1-460-741-11	COIL, CHOKE 1.0UH	
S	L7103	1-460-673-11	CHOKE COIL 1.0UH(ML 2520)	
S	L7104	1-460-896-11	CHOKE COIL 1.5UH	
S	L7110	1-008-615-11	COIL, CHOKE 0.22UH	
S	L7111	1-008-615-11	COIL, CHOKE 0.22UH	
S	L7112	1-008-615-11	COIL, CHOKE 0.22UH	
S	L7114	1-481-992-11	INDUCTOR 1UH (2520)	
S	L7301	1-460-741-11	COIL, CHOKE 1.0UH	
S	L7302	1-008-615-11	COIL, CHOKE 0.22UH	
S	L7303	1-460-677-11	COIL, CHOKE 0.18UH	
S	L7304	1-460-677-11	COIL, CHOKE 0.18UH	
S	L7305	1-008-588-11	CHOKE COIL 0.24UH	
S	L7306	1-008-588-11	CHOKE COIL 0.24UH	
S	L7307	1-008-588-11	CHOKE COIL 0.24UH	
S	L7308	1-008-588-11	CHOKE COIL 0.24UH	
S	L7309	1-008-588-11	CHOKE COIL 0.24UH	
S	L7310	1-008-588-11	CHOKE COIL 0.24UH	
S	L7313	1-008-588-11	CHOKE COIL 0.24UH	
S	L7314	1-008-588-11	CHOKE COIL 0.24UH	
S	L7315	1-008-588-11	CHOKE COIL 0.24UH	
S	L7316	1-008-588-11	CHOKE COIL 0.24UH	
S	L7317	1-008-588-11	CHOKE COIL 0.24UH	
S	L7318	1-008-588-11	CHOKE COIL 0.24UH	
S	L7501	1-460-673-11	CHOKE COIL 1.0UH(ML 2520)	

SC	Ref. No.	Part No.	Description	Remark
S	L7502	1-460-906-11	CHOKE COIL 0.47UH (2520)	
S	L7503	1-481-992-11	INDUCTOR 1UH (2520)	
S	L7504	1-460-673-11	CHOKE COIL 1.0UH(ML 2520)	
S	L7550	1-460-572-11	CHOKE COIL 2.2UH	
			< TRANSISTOR >	
S	Q3501	6-553-837-01	TR SI3493DDV-T1-GE3	
S	Q3502	6-552-949-01	TR DTC044EUBTL	
S	Q3503	6-553-482-01	TR SSM3J56MFV	
S	Q3504	6-552-949-01	TR DTC044EUBTL	
S	Q3601	6-552-948-01	TR DTC043ZUBTL	
S	Q3602	6-552-948-01	TR DTC043ZUBTL	
S	Q3603	6-552-948-01	TR DTC043ZUBTL	
S	Q3604	6-552-934-01	TR DTA044EUBTL	
S	Q3605	6-552-949-01	TR DTC044EUBTL	
S	Q5101	6-552-949-01	TR DTC044EUBTL	
S	Q5102	6-553-482-01	TR SSM3J56MFV	
S	Q5403	6-552-949-01	TR DTC044EUBTL	*
S	Q5404	6-553-837-01	TR SI3493DDV-T1-GE3	*
S	Q7001	6-553-647-01	TR SIRA18DP-T1-GE3	
S	Q7001	6-553-702-01	TR RS1E130GNTB	
S	Q7001	6-553-704-11	TR AON6414A	
S	Q7002	6-553-648-11	TR SIRA06DP-T1-GE3	
S	Q7002	6-553-673-01	TR RS1E280GNTB	
S	Q7002	6-900-432-01	TR AON6314	
S	Q7005	6-551-622-01	TR 2SC6026MFV(TL3S	
S	Q7006	6-552-934-01	TR DTA044EUBTL	
S	Q7103	6-553-647-01	TR SIRA18DP-T1-GE3	
S	Q7103	6-553-702-01	TR RS1E130GNTB	
S	Q7103	6-553-704-11	TR AON6414A	
S	Q7104	6-553-648-11	TR SIRA06DP-T1-GE3	
S	Q7104	6-553-673-01	TR RS1E280GNTB	
S	Q7104	6-900-432-01	TR AON6314	
S	Q7106	6-552-621-01	TR SSM3K37MFV,L3SOF	
S	Q7107	6-552-621-01	TR SSM3K37MFV,L3SOF	
S	Q7108	6-900-753-01	TR BSG0812ND	
S	Q7109	6-900-753-01	TR BSG0812ND	
S	Q7110	6-900-753-01	TR BSG0812ND	
S	Q7301	6-553-482-01	TR SSM3J56MFV	
S	Q7302	6-552-949-01	TR DTC044EUBTL	
S	Q7550	6-553-638-21	TR SIZ342DT-T1-GE3	
			< RESISTOR >	
U	R1023		METAL CHIP 200(1005) 1%	1/16W
U	R1024		METAL CHIP 200(1006) 1%	1/16W
U	R1025		METAL CHIP 200(1007) 1%	1/16W
U	R1026		METAL CHIP 200(1008) 1%	1/16W
U	R1027		METAL CHIP 200(1009) 1%	1/16W

Reproduction Prohibited

SC	Ref. No.	Part No.	Description	Remark	
U	R1028		METAL CHIP 200(1010)	1%	1/16W
U	R1029		METAL CHIP 200(1011)	1%	1/16W
U	R1036		METAL CHIP 200(1012)	1%	1/16W
U	R1037		METAL CHIP 4.99K(1005)	1%	1/16W
U	R1038		METAL CHIP 120(1005)	1%	1/16W
U	R1039		METAL CHIP 4.99K(1005)	1%	1/16W
U	R1041		METAL CHIP 4.99K(1005)	1%	1/16W
U	R1043		METAL CHIP 4.99K(1005)	1%	1/16W
U	R1044		METAL CHIP 4.99K(1005)	1%	1/16W
U	R1045		METAL CHIP 4.99K(1005)	1%	1/16W
U	R1048		METAL CHIP 4.99K(1005)	1%	1/16W
U	R1049		METAL CHIP 4.99K(1005)	1%	1/16W
U	R1050		METAL CHIP 120(1005)	1%	1/16W
U	R1053		METAL CHIP 4.7K (1005)	5%	1/16W
U	R1064		METAL CHIP 2.2K (1005)	5%	1/16W
U	R1065		METAL CHIP 2.2K (1005)	5%	1/16W
U	R1066		METAL CHIP 4.7K (1005)	5%	1/16W
U	R1903		METAL CHIP 1.0K (1005)	5%	1/16W
U	R1904		METAL CHIP 1.0K (1005)	5%	1/16W
U	R1905		METAL CHIP 1.0K (1005)	5%	1/16W
U	R1907		METAL CHIP 1.0K (1005)	5%	1/16W
U	R1908		METAL CHIP 1.0K (1005)	5%	1/16W
U	R2001		METAL CHIP 2.37K(1005)	1%	1/16W
U	R2002		METAL CHIP 5.49K(1005)	1%	1/16W
U	R2003		METAL CHIP 120(1005)	1%	1/16W
U	R2006		METAL CHIP 120(1005)	1%	1/16W
U	R2009		METAL CHIP 120(1005)	1%	1/16W
U	R2012		METAL CHIP 120(1005)	1%	1/16W
U	R2101		METAL CHIP 2.37K(1005)	1%	1/16W
U	R2102		METAL CHIP 5.49K(1005)	1%	1/16W
U	R2103		METAL CHIP 120(1005)	1%	1/16W
U	R2106		METAL CHIP 120(1005)	1%	1/16W
U	R2107		METAL CHIP 2.37K(1005)	1%	1/16W
U	R2108		METAL CHIP 5.49K(1005)	1%	1/16W
U	R2109		METAL CHIP 120(1005)	1%	1/16W
U	R2112		METAL CHIP 120(1005)	1%	1/16W
U	R2201		METAL CHIP 2.37K(1005)	1%	1/16W
U	R2202		METAL CHIP 5.49K(1005)	1%	1/16W
U	R2203		METAL CHIP 120(1005)	1%	1/16W
U	R2206		METAL CHIP 120(1005)	1%	1/16W
U	R2207		METAL CHIP 2.37K(1005)	1%	1/16W
U	R2208		METAL CHIP 5.49K(1005)	1%	1/16W
U	R2209		METAL CHIP 120(1005)	1%	1/16W
U	R2212		METAL CHIP 120(1005)	1%	1/16W
U	R2301		METAL CHIP 2.37K(1005)	1%	1/16W

SC	Ref. No.	Part No.	Description	Remark	
U	R2302		METAL CHIP 5.49K(1005)	1%	1/16W
U	R2303		METAL CHIP 120(1005)	1%	1/16W
U	R2306		METAL CHIP 120(1005)	1%	1/16W
U	R2307		METAL CHIP 2.37K(1005)	1%	1/16W
U	R2308		METAL CHIP 5.49K(1005)	1%	1/16W
U	R2310		METAL CHIP 120(1005)	1%	1/16W
U	R2313		METAL CHIP 120(1005)	1%	1/16W
U	R2415		METAL CHIP 2.37K(1005)	1%	1/16W
U	R2416		METAL CHIP 5.49K(1005)	1%	1/16W
U	R3018		METAL CHIP 4.7K (1005)	5%	1/16W
U	R3020		METAL CHIP 6.8K(1005)	1%	1/16W
U	R3022		METAL CHIP 27K (1005)	5%	1/16W
U	R3023		METAL CHIP 1.8K (1005)	5%	1/16W
U	R3024		METAL CHIP 1.8K (1005)	5%	1/16W
U	R3028		METAL CHIP 22(1608)	5%	1/16W
U	R3501		METAL CHIP 10K (1005)	5%	1/16W
U	R3506		METAL CHIP 10K (1005)	5%	1/16W
U	R3508		METAL CHIP 10K (1005)	5%	1/16W
U	R3521		METAL CHIP 1.5K(1005)	1%	1/16W
U	R3523		METAL CHIP 100K (1005)	5%	1/16W
U	R3524		METAL CHIP 10K (1005)	5%	1/16W
U	R3529		METAL CHIP 2.0K(1005)	1%	1/16W
U	R3537		METAL CHIP 10K (1005)	5%	1/16W
U	R3549		METAL CHIP 20K (1005)	1%	1/16W
U	R3550		METAL CHIP 3.6K (1005)	1%	1/16W
U	R3554		METAL CHIP 82K (1005)	1%	1/16W
U	R3555		METAL CHIP 47K (1005)	1%	1/16W
U	R3556		METAL CHIP 3.3K (1005)	5%	1/16W
U	R3561		METAL CHIP 4.7K (1005)	5%	1/16W
U	R3562		METAL CHIP 2.2K (1005)	5%	1/16W
U	R3563		METAL CHIP 2.2K (1005)	5%	1/16W
U	R3566		METAL CHIP 3.3K (1005)	5%	1/16W
U	R3567		METAL CHIP 3.3K (1005)	5%	1/16W
U	R3617		METAL CHIP 10K (1005)	5%	1/16W
U	R3618		METAL CHIP 10K (1005)	5%	1/16W
U	R3619		METAL CHIP 10K (1005)	5%	1/16W
U	R3620		METAL CHIP 10K (1005)	5%	1/16W
U	R3621		METAL CHIP 100K (1005)	5%	1/16W
U	R3622		METAL CHIP 100K (1005)	5%	1/16W
U	R3623		METAL CHIP 1.0K (1005)	5%	1/16W
U	R3624		METAL CHIP 1.0K (1005)	5%	1/16W
U	R3627		METAL CHIP 10K (1005)	5%	1/16W
U	R3628		METAL CHIP 10K (1005)	5%	1/16W
U	R3629		METAL CHIP 100K (1005)	5%	1/16W
U	R3630		METAL CHIP 1.0K (1005)	5%	1/16W

SC	Ref. No.	Part No.	Description	Remark	
U	R4001		METAL CHIP 22(1608)	5%	1/16W
U	R4002		METAL CHIP 22(1608)	5%	1/16W
U	R4004		METAL CHIP 6.04K(1005)	1%	1/16W
U	R4007		METAL CHIP 1.0K(1005)	1%	1/16W
U	R4008		METAL CHIP 1.0K(1005)	1%	1/16W
U	R4012		METAL CHIP 4.7K (1005)	5%	1/16W
U	R4022		METAL CHIP 120(1005)	1%	1/16W
U	R4049		METAL CHIP 1.0K (1005)	5%	1/16W
U	R4050		METAL CHIP 1.0K (1005)	5%	1/16W
U	R4051		METAL CHIP 4.7K (1005)	5%	1/16W
U	R4052		METAL CHIP 4.7K (1005)	5%	1/16W
U	R4055		METAL CHIP 120(1005)	1%	1/16W
U	R4056		METAL CHIP 4.7K (1005)	5%	1/16W
U	R4064		METAL CHIP 4.7K (1005)	5%	1/16W
U	R4065		METAL CHIP 4.7K (1005)	5%	1/16W
U	R4067		METAL CHIP 2.2K (1005)	5%	1/16W
U	R4068		METAL CHIP 2.2K (1005)	5%	1/16W
U	R4069		METAL CHIP 1.0K (1005)	5%	1/16W
U	R4070		METAL CHIP 1.0K (1005)	5%	1/16W
U	R4081		METAL CHIP 4.7K (1005)	5%	1/16W
U	R4101		METAL CHIP 49.9(1005)	1%	1/16W
U	R4102		METAL CHIP 49.9(1005)	1%	1/16W
U	R4103		METAL CHIP 49.9(1005)	1%	1/16W
U	R4104		METAL CHIP 49.9(1005)	1%	1/16W
U	R4105		METAL CHIP 49.9(1005)	1%	1/16W
U	R4106		METAL CHIP 49.9(1005)	1%	1/16W
U	R4107		METAL CHIP 49.9(1005)	1%	1/16W
U	R4108		METAL CHIP 49.9(1005)	1%	1/16W
U	R4109		METAL CHIP 49.9(1005)	1%	1/16W
U	R4110		METAL CHIP 49.9(1005)	1%	1/16W
U	R4111		METAL CHIP 49.9(1005)	1%	1/16W
U	R4112		METAL CHIP 49.9(1005)	1%	1/16W
U	R4113		METAL CHIP 49.9(1005)	1%	1/16W
U	R4114		METAL CHIP 49.9(1005)	1%	1/16W
U	R4115		METAL CHIP 49.9(1005)	1%	1/16W
U	R4116		METAL CHIP 49.9(1005)	1%	1/16W
U	R4117		METAL CHIP 49.9(1005)	1%	1/16W
U	R4118		METAL CHIP 49.9(1005)	1%	1/16W
U	R4119		METAL CHIP 1.0K(1005)	1%	1/16W
U	R4120		METAL CHIP 1.0K(1005)	1%	1/16W
U	R4121		METAL CHIP 49.9(1005)	1%	1/16W
U	R4122		METAL CHIP 49.9(1005)	1%	1/16W
U	R4123		METAL CHIP 49.9(1005)	1%	1/16W
U	R4124		METAL CHIP 49.9(1005)	1%	1/16W
U	R4125		METAL CHIP 49.9(1005)	1%	1/16W

SC	Ref. No.	Part No.	Description	Remark	
U	R4126		METAL CHIP 49.9(1005)	1%	1/16W
U	R4127		METAL CHIP 49.9(1005)	1%	1/16W
U	R4128		METAL CHIP 49.9(1005)	1%	1/16W
U	R4129		METAL CHIP 240(1005)	1%	1/16W
U	R4130		METAL CHIP 49.9(1005)	1%	1/16W
U	R4201		METAL CHIP 1.0K(1005)	1%	1/16W
U	R4202		METAL CHIP 1.0K(1005)	1%	1/16W
U	R4203		METAL CHIP 1.0K(1005)	1%	1/16W
U	R4204		METAL CHIP 1.0K(1005)	1%	1/16W
U	R4205		METAL CHIP 10K (1005)	5%	1/16W
U	R4206		METAL CHIP 10K (1005)	5%	1/16W
U	R4207		METAL CHIP 4.7K (1005)	5%	1/16W
U	R4209		METAL CHIP 4.7K (1005)	5%	1/16W
U	R4211		METAL CHIP 4.7K (1005)	5%	1/16W
U	R4213		METAL CHIP 4.7K (1005)	5%	1/16W
U	R4215		METAL CHIP 300(1005)	1%	1/16W
U	R4216		METAL CHIP 300(1005)	1%	1/16W
U	R4217		METAL CHIP 300(1005)	1%	1/16W
U	R4218		METAL CHIP 300(1005)	1%	1/16W
U	R4219		METAL CHIP 10K (1005)	5%	1/16W
U	R4220		METAL CHIP 10K (1005)	5%	1/16W
U	R4221		METAL CHIP 4.7K (1005)	5%	1/16W
U	R4223		METAL CHIP 4.7K (1005)	5%	1/16W
U	R4225		METAL CHIP 4.7K (1005)	5%	1/16W
U	R4227		METAL CHIP 4.7K (1005)	5%	1/16W
U	R4229		METAL CHIP 300(1005)	1%	1/16W
U	R4230		METAL CHIP 300(1005)	1%	1/16W
U	R4231		METAL CHIP 300(1005)	1%	1/16W
U	R4232		METAL CHIP 300(1005)	1%	1/16W
U	R4233		METAL CHIP 10K (1005)	5%	1/16W
U	R4234		METAL CHIP 10K (1005)	5%	1/16W
U	R4235		METAL CHIP 4.7K (1005)	5%	1/16W
U	R4237		METAL CHIP 4.7K (1005)	5%	1/16W
U	R4239		METAL CHIP 4.7K (1005)	5%	1/16W
U	R4241		METAL CHIP 4.7K (1005)	5%	1/16W
U	R4243		METAL CHIP 300(1005)	1%	1/16W
U	R4244		METAL CHIP 300(1005)	1%	1/16W
U	R4245		METAL CHIP 300(1005)	1%	1/16W
U	R4246		METAL CHIP 300(1005)	1%	1/16W
U	R4503		METAL CHIP 100 (1005)	5%	1/16W
U	R4504		METAL CHIP 100 (1005)	5%	1/16W
U	R5007		METAL CHIP 1.0K (1005)	5%	1/16W
U	R5022		METAL CHIP 2.2K (1005)	5%	1/16W
U	R5026		METAL CHIP 2.2K (1005)	5%	1/16W
U	R5029		METAL CHIP 4.7K (1005)	5%	1/16W

Reproduction Prohibited

SC	Ref. No.	Part No.	Description	Remark		
U	R5036		METAL CHIP 24K(1005)	1%	1/16W	
U	R5037		METAL CHIP 560 (1005)	5%	1/16W	
U	R5055		METAL CHIP 33 (1608)	5%	1/16W	
U	R5056		METAL CHIP 33 (1608)	5%	1/16W	
U	R5058		METAL CHIP 47 (1005)	5%	1/16W	
U	R5060		METAL CHIP 47 (1005)	5%	1/16W	
U	R5061		METAL CHIP 22 (1608)	5%	1/16W	
U	R5063		METAL CHIP 10K (1005)	5%	1/16W	
U	R5064		METAL CHIP 4.7K (1005)	5%	1/16W	
U	R5066		METAL CHIP 10K (1005)	5%	1/16W	
U	R5067		METAL CHIP 47 (1005)	5%	1/16W	
U	R5068		METAL CHIP 47 (1005)	5%	1/16W	
U	R5069		METAL CHIP 4.7K (1005)	5%	1/16W	
U	R5070		METAL CHIP 4.7K (1005)	5%	1/16W	
U	R5074		METAL CHIP 4.7K (1005)	5%	1/16W	
U	R5077		METAL CHIP 4.7K (1005)	5%	1/16W	
U	R5078		METAL CHIP 4.7K (1005)	5%	1/16W	
U	R5086		METAL CHIP 4.7K (1005)	5%	1/16W	
U	R5092		METAL CHIP 4.7K (1005)	5%	1/16W	
U	R5101		METAL CHIP 1.0K (1005)	5%	1/16W	
U	R5103		METAL CHIP 4.7K (1005)	5%	1/16W	
U	R5104		METAL CHIP 10K (1005)	5%	1/16W	
U	R5108		METAL CHIP 4.7K (1005)	5%	1/16W	
U	R5109		METAL CHIP 1.2K (1005)	5%	1/16W	
U	R5110		METAL CHIP 1.2K (1005)	5%	1/16W	
U	R5111		METAL CHIP 4.7K (1005)	5%	1/16W	
U	R5112		METAL CHIP 4.7K (1005)	5%	1/16W	
U	R5113		METAL CHIP 4.7K (1005)	5%	1/16W	
U	R5114		METAL CHIP 4.7K (1005)	5%	1/16W	
U	R5125		METAL CHIP 120 (1005)	5%	1/16W	
U	R5126		METAL CHIP 6.8K(1005)	1%	1/16W	
U	R5133		METAL CHIP 6.8K(1005)	1%	1/16W	
U	R5144		METAL CHIP 4.7K (1005)	5%	1/16W	
U	R5145		METAL CHIP 4.7K (1005)	5%	1/16W	
U	R5146		METAL CHIP 560 (1005)	5%	1/16W	*
U	R5149		METAL CHIP 100K (1005)	5%	1/16W	
U	R5151		METAL CHIP 270K (1005)	5%	1/16W	
U	R5152		METAL CHIP 20K(1005)	1%	1/16W	
U	R5153		METAL CHIP 10K(1005)	1%	1/16W	
U	R5156		METAL CHIP 6.8K(1005)	1%	1/16W	
U	R5159		METAL CHIP 100 (1005)	5%	1/16W	
U	R5161		METAL CHIP 22(1608)	5%	1/16W	
U	R5162		METAL CHIP 22(1608)	5%	1/16W	
U	R5301		METAL CHIP 75K (1005)	5%	1/16W	
U	R5302		METAL CHIP 75K (1005)	5%	1/16W	

SC	Ref. No.	Part No.	Description	Remark		
U	R5303		METAL CHIP 75K (1005)	5%	1/16W	
U	R5304		METAL CHIP 75K (1005)	5%	1/16W	
U	R5403		METAL CHIP 100K (1005)	5%	1/16W	*
U	R5404		METAL CHIP 68K (1005)	5%	1/16W	*
U	R5406		METAL CHIP 100K (1005)	5%	1/16W	*
U	R5407		METAL CHIP 100K (1005)	5%	1/16W	*
U	R7002		METAL CHIP 220K(1005)	1%	1/16W	
U	R7003		METAL CHIP 47K(1005)	1%	1/16W	
U	R7004		METAL CHIP 6.2K(1005)	1%	1/16W	
U	R7005		METAL CHIP 75K(1005)	1%	1/16W	
U	R7006		METAL CHIP 11K(1005)	1%	1/16W	
U	R7009		METAL CHIP 33K(1005)	1%	1/16W	
U	R7014		METAL CHIP 100K(1005)	5%	1/16W	
U	R7019		METAL CHIP 10K (1005)	5%	1/16W	
U	R7021		METAL CHIP 6.8(1608)	5%	1/10W	
U	R7022		METAL CHIP 51K (1005)	5%	1/16W	
U	R7023		METAL CHIP 5.6(1608)	5%	1/10W	
U	R7024		METAL CHIP 150K(1005)	1%	1/16W	
U	R7025		METAL CHIP 220K(1005)	1%	1/16W	
U	R7026		METAL CHIP 1.8K(1005)	1%	1/16W	
U	R7029		METAL CHIP 100K (1005)	5%	1/16W	
U	R7031		METAL CHIP 1(1608)	5%	1/10W	
U	R7050		METAL CHIP 100K (1005)	5%	1/16W	
U	R7051		METAL CHIP 100K (1005)	5%	1/16W	
U	R7052		METAL CHIP 51K (1005)	5%	1/16W	
U	R7053		METAL CHIP 51K (1005)	5%	1/16W	
U	R7057		METAL CHIP 150K(1005)	1%	1/16W	
U	R7058		METAL CHIP 160K(1005)	1%	1/16W	
U	R7059		METAL CHIP 470K(1005)	1%	1/16W	
U	R7060		METAL CHIP 200K(1005)	1%	1/16W	
U	R7072		METAL CHIP 100K (1005)	5%	1/16W	
U	R7075		METAL CHIP 100K (1005)	5%	1/16W	
U	R7078		METAL CHIP 100K (1005)	5%	1/16W	
U	R7081		METAL CHIP 100K (1005)	5%	1/16W	
U	R7084		METAL CHIP 68K (1005)	1%	1/16W	
U	R7087		METAL CHIP 1.5K(1005)	1%	1/16W	
U	R7088		METAL CHIP 3.9K(1005)	1%	1/16W	
U	R7089		METAL CHIP 18K(1005)	1%	1/16W	
U	R7101		METAL CHIP 10K (1005)	5%	1/16W	
U	R7107		METAL CHIP 3.0K(1005)	1%	1/16W	
U	R7108		METAL CHIP 82K(1005)	1%	1/16W	
U	R7109		METAL CHIP 11K(1005)	1%	1/16W	
U	R7111		METAL CHIP 20K(1005)	1%	1/16W	
U	R7112		METAL CHIP 100K (1005)	5%	1/16W	
U	R7118		METAL CHIP 100K (1005)	5%	1/16W	

SC	Ref. No.	Part No.	Description	Remark	
U	R7121		METAL CHIP 200K (1005)	1%	1/16W
U	R7122		METAL CHIP 100K (1005)	1%	1/16W
U	R7123		METAL CHIP 6.8 (1608)	5%	1/10W
U	R7124		METAL CHIP 240 (1005)	1%	1/16W
U	R7125		METAL CHIP 360 (1005)	1%	1/16W
U	R7126		METAL CHIP 3.9K (1005)	1%	1/16W
U	R7127		METAL CHIP 240 (1005)	1%	1/16W
U	R7128		METAL CHIP 360 (1005)	1%	1/16W
U	R7129		METAL CHIP 3.9K (1005)	1%	1/16W
U	R7130		METAL CHIP 5.6 (1608)	5%	1/10W
U	R7132		METAL CHIP 1 (1608)	5%	1/10W
U	R7140		METAL CHIP 1.5K (1005)	1%	1/16W
U	R7141		METAL CHIP 3.9K (1005)	1%	1/16W
U	R7142		METAL CHIP 4.7K (1005)	1%	1/16W
U	R7143		METAL CHIP 6.8K (1005)	1%	1/16W
U	R7144		METAL CHIP 12K (1005)	1%	1/16W
U	R7145		METAL CHIP 5.6K (1005)	1%	1/16W
U	R7146		METAL CHIP 20K (1005)	1%	1/16W
U	R7153		METAL CHIP 10K (1005)	5%	1/16W
U	R7156		METAL CHIP 10K (1005)	5%	1/16W
U	R7157		METAL CHIP 330 (1005)	1%	1/16W
U	R7158		METAL CHIP 2.7K (1005)	1%	1/16W
U	R7159		METAL CHIP 15K (1005)	1%	1/16W
U	R7161		METAL CHIP 3.9K (1005)	1%	1/16W
U	R7162		METAL CHIP 10K (1005)	1%	1/16W
U	R7163		METAL CHIP 15K(1005)	1%	1/16W
U	R7170		METAL CHIP 33K(1005)	1%	1/16W
U	R7172		METAL CHIP 33K(1005)	1%	1/16W
U	R7174		METAL CHIP 33K(1005)	1%	1/16W
U	R7178		METAL CHIP 27K(1005)	1%	1/16W
U	R7179		METAL CHIP 27K(1005)	1%	1/16W
U	R7180		METAL CHIP 27K(1005)	1%	1/16W
U	R7182		METAL CHIP 1(1608)	5%	1/10W
U	R7183		METAL CHIP 1(1608)	5%	1/10W
U	R7184		METAL CHIP 1(1608)	5%	1/10W
U	R7186		METAL CHIP 2.2(1608)	5%	1/10W
U	R7187		METAL CHIP 2.2 (1005)	5%	1/16W
U	R7188		METAL CHIP 2.2(1608)	5%	1/10W
U	R7189		METAL CHIP 2.2 (1005)	5%	1/16W
U	R7190		METAL CHIP 2.2(1608)	5%	1/10W
U	R7191		METAL CHIP 2.2 (1005)	5%	1/16W
U	R7193		METAL CHIP 1(1608)	5%	1/10W
U	R7194		METAL CHIP 1(1608)	5%	1/10W
U	R7195		METAL CHIP 1(1608)	5%	1/10W
U	R7211		METAL CHIP 2.2K(1005)	1%	1/16W

SC	Ref. No.	Part No.	Description	Remark	
U	R7212		METAL CHIP 4.7K (1005)	1%	1/16W
U	R7213		METAL CHIP 3.9K (1005)	1%	1/16W
U	R7221		METAL CHIP 33K (1005)	1%	1/16W
U	R7222		METAL CHIP 47K (1005)	1%	1/16W
U	R7223		METAL CHIP 10K (1005)	5%	1/16W
U	R7224		METAL CHIP 10K (1005)	5%	1/16W
U	R7225		METAL CHIP 51K (1005)	5%	1/16W
U	R7226		METAL CHIP 150K (1005)	1%	1/16W
U	R7227		METAL CHIP 150K (1005)	1%	1/16W
U	R7228		METAL CHIP 91K (1005)	1%	1/16W
U	R7313		METAL CHIP 1.2K (1005)	5%	1/16W
U	R7316		METAL CHIP 1.2K (1005)	5%	1/16W
U	R7317		METAL CHIP 47 (1005)	5%	1/16W
U	R7318		METAL CHIP 47 (1005)	5%	1/16W
U	R7319		METAL CHIP 4.7K (1005)	5%	1/16W
U	R7322		METAL CHIP 4.7K (1005)	5%	1/16W
U	R7325		METAL CHIP 4.7K (1005)	5%	1/16W
U	R7326		METAL CHIP 47 (1005)	5%	1/16W
U	R7331		METAL CHIP 3.6K (1005)	1%	1/16W
U	R7332		METAL CHIP 20K (1005)	1%	1/16W
U	R7333		METAL CHIP 3.6K (1005)	1%	1/16W
U	R7334		METAL CHIP 1.6K (1005)	1%	1/16W
U	R7336		METAL CHIP 100K (1005)	5%	1/16W
U	R7337		METAL CHIP 270K (1005)	5%	1/16W
U	R7340		METAL CHIP 5.6K (1005)	1%	1/16W
U	R7341		METAL CHIP 2.7K (1005)	1%	1/16W
U	R7344		METAL CHIP 5.6K (1005)	1%	1/16W
U	R7345		METAL CHIP 2.7K (1005)	1%	1/16W
U	R7358		METAL CHIP 1 (1608)	5%	1/10W
U	R7359		METAL CHIP 1(1608)	5%	1/10W
U	R7360		METAL CHIP 1 (1608)	5%	1/10W
U	R7361		METAL CHIP 1 (1608)	5%	1/10W
U	R7362		METAL CHIP 2.4K (1005)	1%	1/16W
U	R7363		METAL CHIP 1.8K (1005)	1%	1/16W
U	R7366		METAL CHIP 2.4K (1005)	1%	1/16W
U	R7367		METAL CHIP 1.8K (1005)	1%	1/16W
U	R7370		METAL CHIP 2.4K (1005)	1%	1/16W
U	R7371		METAL CHIP 1.8K (1005)	1%	1/16W
U	R7374		METAL CHIP 2.4K (1005)	1%	1/16W
U	R7375		METAL CHIP 1.8K (1005)	1%	1/16W
U	R7378		METAL CHIP 2.4K (1005)	1%	1/16W
U	R7379		METAL CHIP 1.8K (1005)	1%	1/16W
U	R7382		METAL CHIP 2.4K (1005)	1%	1/16W
U	R7383		METAL CHIP 1.8K (1005)	1%	1/16W
U	R7397		METAL CHIP 1 (1608)	5%	1/10W

Reproduction Prohibited

SC	Ref. No.	Part No.	Description	Remark	
U	R7398		METAL CHIP 1(1608)	5%	1/10W
U	R7399		METAL CHIP 1(1608)	5%	1/10W
U	R7400		METAL CHIP 1(1608)	5%	1/10W
U	R7413		METAL CHIP 2.2 (1005)	5%	1/16W
U	R7414		METAL CHIP 1.0 (1005)	5%	1/16W
U	R7416		METAL CHIP 2.2 (1005)	5%	1/16W
U	R7421		METAL CHIP 1.0 (1005)	5%	1/16W
U	R7422		METAL CHIP 2.2 (1005)	5%	1/16W
U	R7427		METAL CHIP 1.0 (1005)	5%	1/16W
U	R7428		METAL CHIP 1.0 (1005)	5%	1/16W
U	R7429		METAL CHIP 2.2 (1005)	5%	1/16W
U	R7434		METAL CHIP 1.0 (1005)	5%	1/16W
U	R7435		METAL CHIP 2.2 (1005)	5%	1/16W
U	R7440		METAL CHIP 2.2 (1005)	5%	1/16W
U	R7445		METAL CHIP 1.0 (1005)	5%	1/16W
U	R7446		METAL CHIP 2.2 (1005)	5%	1/16W
U	R7451		METAL CHIP 1.0 (1005)	5%	1/16W
U	R7452		METAL CHIP 1.0 (1005)	5%	1/16W
U	R7453		METAL CHIP 2.2 (1005)	5%	1/16W
U	R7454		METAL CHIP 12K(1005)	1%	1/16W
U	R7471		METAL CHIP 4.7K (1005)	5%	1/16W
U	R7477		METAL CHIP 10K(1005)	1%	1/16W
U	R7478		METAL CHIP 10 (1005)	1%	1/16W
U	R7479		METAL CHIP 10 (1005)	1%	1/16W
U	R7480		METAL CHIP 13K(1005)	1%	1/16W
U	R7481		METAL CHIP 13K(1005)	1%	1/16W
U	R7482		METAL CHIP 1.0K (1005)	5%	1/16W
U	R7510		METAL CHIP 2.2(1608)	5%	1/10W
U	R7550		METAL CHIP 100K (1005)	5%	1/16W
U	R7551		METAL CHIP 2.2(1608)	5%	1/10W
U	R7552		METAL CHIP 5.6(1608)	5%	1/10W
U	R7553		METAL CHIP 1(1608)	5%	1/10W
U	R7556		METAL CHIP 3.6K(1005)	1%	1/16W
U	R7557		METAL CHIP 75K(1005)	1%	1/16W
U	R7558		METAL CHIP 18K(1005)	1%	1/16W
U	R7559		METAL CHIP 47K(1005)	1%	1/16W
U	R7560		METAL CHIP 5.6K(1005)	1%	1/16W
U	R7561		METAL CHIP 100K (1005)	5%	1/16W
			< TRANSFORMER >		
S	T5301	1-697-546-22	TRANSFORMER, PULSE		
U	T5301	1-697-547-11	TRANSFORMER, PULSE		

SC	Ref. No.	Part No.	Description	Remark	
			< THERMISTOR(POSITIVE) >		
S ⚠	TH5101	1-804-949-12	THERMISTOR, NTC (SMD)		
S ⚠	TH5103	1-804-949-12	THERMISTOR, NTC (SMD)		
S ⚠	TH7301	1-811-910-11	NTC THERMISTOR (SMD)		
S ⚠	TH7302	1-811-910-11	NTC THERMISTOR (SMD)		
			< VIBRATOR >		
S	X5001	1-814-363-11	QUARTZ CRYSTAL UNIT		
S	X5002	1-814-630-11	QUARTZ CRYSTAL UNITS		
			< EDL-010 >		
S		A-5021-714-A	EDL-010 COMPL		
			< CAPACTOR >		
U	C101	1-122-161-11	CERAMIC CHIP 0.1MF X5R (0603)	10%	16V
U	C105	1-118-031-11	CERAMIC CHIP 0.01MF X5R (0603)	10%	16V
			< CONNECTOR >		
U	CN101	1-816-654-61	FFC/FPC CONNECTOR (LIF) 6P		
U	CN101	1-822-787-21	FFC/FPC CONNECTOR (LIF) 6P		
U	CN101	1-843-455-11	CONNECTOR, FFC/FPC (LIF) 6P		
			< DIODE >		
U	D101	6-503-065-01	DI SML-D13Y8WT86S		
U	D102	6-503-065-01	DI SML-D13Y8WT86S		
U	D103	6-502-395-01	DI SL-194S-WS-SD-T		
U	D104	6-502-395-01	DI SL-194S-WS-SD-T		
U	D105	6-502-395-01	DI SL-194S-WS-SD-T		
U	D106	6-502-395-01	DI SL-194S-WS-SD-T		
U	D109	6-502-383-01	DI CL-194S-HB8-SD-T		
U	D110	6-502-383-01	DI CL-194S-HB8-SD-T		
U	D111	6-502-383-01	DI CL-194S-HB8-SD-T		
U	D112	6-502-383-01	DI CL-194S-HB8-SD-T		
			< TRANSISTOR >		
U	Q101	6-552-948-01	TR DTC043ZUBTL		
U	Q102	6-552-948-01	TR DTC043ZUBTL		
U	Q103	6-552-941-01	TR DTC023JUBTL		
			< RESISTOR >		
U	R101	1-250-608-11	METAL CHIP 470(1608)		
U	R102	1-250-608-11	METAL CHIP 470(1609)		
U	R103	1-250-608-11	METAL CHIP 470(1610)		
U	R104	1-250-608-11	METAL CHIP 470(1611)		
U	R105	1-250-608-11	METAL CHIP 470(1612)		
U	R106	1-250-608-11	METAL CHIP 470(1613)		
U	R109	1-250-598-11	METAL CHIP 180(1608)		
U	R110	1-250-598-11	METAL CHIP 180(1609)		
U	R111	1-250-598-11	METAL CHIP 180(1610)		
U	R112	1-250-598-11	METAL CHIP 180(1611)		

SC	Ref. No.	Part No.	Description	Remark	
			< THERMISTOR(POSITIVE) >		
U	TH101	1-804-949-12	THERMISTOR, NTC (SMD)		
			< EDU-010 >		
S		A-5021-717-A	EDU-010 COMPL		
			< CAPACTOR >		
U	C301		CERAMIC CHIP 220PF X7R 0603	10%	50V
U	C302		CERAMIC CHIP 220PF X7R 0603	10%	50V
			< CONNECTOR >		
U	CN301	1-008-389-11	CONNECTOR, FFC/FPC (LIF) 40P		
U	CN301	1-008-596-11	CONNECTOR, FFC/FPC (LIF) 40P		
U	CN302	1-008-699-11	CONNECTOR, USB 2.0		
U	CN302	1-008-929-11	CONNECTOR, USB 2.0		
U	CN303	1-008-593-11	USB CONNECTOR TYPE-C		
U	CN303	1-008-944-11	USB CONNECTOR TYPE-C		
			< COIL >		
U	L301		COMMON MODE CHOKE COIL	0UH	
U	L302		COMMON MODE CHOKE COIL	0UH	
U	L303		COMMON MODE CHOKE COIL	0UH	
			< EDS-010 (E) >		
S		A-5021-711-A	EDS-010 COMPL(E)	*	
S		A-5023-191-A	EDS-010 MOUNT(D)		
			< CONNECTOR >		
U	CN201	1-816-654-61	FFC/FPC CONNECTOR (LIF) 6P		
U	CN201	1-822-787-21	FFC/FPC CONNECTOR (LIF) 6P		
U	CN201	1-843-455-11	CONNECTOR, FFC/FPC (LIF) 6P		
			< SWITCH >		
U	S201	1-798-377-11	SWITCH, TACTILE		
U	S201	1-798-377-21	SWITCH, TACTILE		
U	S201	1-798-576-11	TACTILE SWITCH		
U	S202	1-798-377-11	SWITCH, TACTILE	*	
U	S202	1-798-377-21	SWITCH, TACTILE	*	
U	S202	1-798-576-11	TACTILE SWITCH	*	